DATA SHEET

(DOC No. HX8264-D03-DS)

HX8264-D03

1200 CH TFT LCD Source Driver
with TCON

Version 03 January, 2012

Himax Technologies, Inc.
http://www.himax.com.tw

List of Contents

1. General Description 5
2. Features 5
3. Block Diagram 6
3.1 Function block diagram 6
3.2 Application block diagram 7
3.2.1 Single chip application 7
3.2.2 Two chip cascade application 9
3.2.3 Dual gate application 15
4. Pin Description 21
5. Operation Description 25
5.1 Relationship between input data and output channels 25
5.2 HX8264-D03 configuration table 27
5.3 The BIST Pattern for Aging Mode Test 29
6. Gamma Adjustment Function 30
6.1 Relationship between gamma correction and output voltage 30
7. CABC (Content Adaptive Brightness Control) 45
7.1 CABC Hardware Control 46
7.2 CABC Software SPI Control 46
7.3 Commend Description 47
8. 3-wire Serial Peripheral Interface (SPI) 51
9. Power on/off Sequence 52
9.1 Power on/off control 52
9.2 Enter and exit standby mode sequence 52
10. DC Characteristics 53
10.1 Absolute maximum rating (VSS=0V) 53
10.2 DC electrical characteristics (VSS=0V, T_A=25℃) 53
11. AC Characteristics 54
11.1 AC electrical characteristics 54
11.2 Data input format 55
11.2.1 Resolution：800x480 56
11.2.2 Resolution：800x600 57
11.2.3 Resolution：640x480 58
11.2.4 Resolution：400x240 59
12. Waveform 60
12.1 Timing waveform table 60
12.1.1 Parallel 24-bit RGB mode 60
12.2 Timing diagram 61
12.2.1 Input clock and data timing waveform 61
12.2.2 Source output timing waveform (Cascade) 61
12.2.3 Vertical timing diagram HV (Cascade) 62
12.2.4 Vertical timing diagram DE (Cascade) 62
12.2.5 Gate output timing diagram (Cascade) 62
12.2.6 Vertical timing diagram HV (Dual gate) 63
12.2.7 Vertical timing diagram DE (Dual gate) 63
12.2.8 Gate output timing diagram (Dual gate) 63
13. Pin Assignment (IC Face View) 64
14. Package Outline 65
14.1 Pad coordinates 68
15. Ordering Information 84
16. Revision History 84

Himax Confidential
Do Not Copy

This information contained herein is the exclusive property of Himax and shall not be distributed, reproduced, or disclosed in whole or in part without prior written permission of Himax.

List of Figures

Figure 3.1: HX8264-D03 Function Block Diagram 6
Figure 3.2: HX8264-D03 Single Chip 400(RGB) x 240 Application Block Diagram-1 7
Figure 3.3: HX8264-D03 Single Chip 400(RGB) x 240 Application Block Diagram-2 8
Figure 3.4: HX8264-D03 Two Chip Cascade 800(RGB) x 480 Application Block Diagram-1 9
Figure 3.5: HX8264-D03 Two Chip Cascade 800(RGB) x 480 Application Block Diagram-2 10
Figure 3.6: HX8264-D03 Two Chip Cascade 800(RGB) x 600 Application Block Diagram-1 11
Figure 3.7: HX8264-D03 Two Chip Cascade 800(RGB) x 600 Application Block Diagram-2 12
Figure 3.8: HX8264-D03 Two Chip Cascade 640(RGB) x 480 Application Block Diagram-1 13
Figure 3.9: HX8264-D03 Two Chip Cascade 640(RGB) x 480 Application Block Diagram-2 14
Figure 3.10: HX8264-D03 Dual Gate 800(RGB) x 480 Application Block Diagram-1 15
Figure 3.11: HX8264-D03 Dual Gate 800(RGB) x 480 Application Block Diagram-2 16
Figure 3.12: HX8264-D03 Dual Gate 800(RGB) x 600 Application Block Diagram-1 17
Figure 3.13: HX8264-D03 Dual Gate 800(RGB) x 600 Application Block Diagram-2 18
Figure 3.14: HX8264-D03 Dual Gate 640(RGB) x 480 Application Block Diagram-1 19
Figure 3.15: HX8264-D03 Dual Gate 640(RGB) x 480 Application Block Diagram-2 20
Figure 6.1: Gamma Correction Characteristic Curve 30
Figure 8.1: Serial Interface Signal Timing Chart 51
Figure 9.1: Power on/off Timing Sequence 52
Figure 9.2: Enter and Exit Standby Mode Sequence 52
Figure 11.1: Horizontal Input Timing Diagram 55
Figure 11.2: Vertical Input Timing Diagram 55
Figure 12.1: Input Clock and Data Timing Diagram 61
Figure 12.2: Source Output Timing Diagram 61
Figure 12.3: Output Load Condition 61
Figure 12.4: Vertical Timing Diagram HV (Cascade) 62
Figure 12.5: Vertical Timing Diagram DE (Cascade) 62
Figure 12.6: Gate Output Timing Diagram (Cascade) 62
Figure 12.7: Vertical Timing Diagram HV (Dual Gate) 63
Figure 12.8: Vertical Timing Diagram DE (Dual Gate) 63
Figure 12.9: Gate Output Timing Diagram (Dual Gate) 63
Figure 13.1: Pin Assignment 64
Figure 14.1: Package Outline 66
Figure 14.2: Alignment Mark 67

Himax Confidential
Do Not Copy

List of Tables

Table 4.1: HX8264-D03 Pass Line Description 24
Table 4.2: The Recommended Wiring Resistance Values 24
Table 5.1: HX8264-D03 DATR[17:0] Pin Mapping Table 27
Table 5.2: HX8264-D03 DATL[17:0] Pin Mapping Table 28
Table 8.1: Serial Interface timing parameter 51
Table 12.1: Parallel 24-bit RGB mode 60
Table 14.1: Pad Information 67

Himax Confidential
Do Not Copy

This information contained herein is the exclusive property of Himax and shall not be distributed, reproduced, or disclosed in whole or in part without prior written permission of Himax.

1. General Description

HX8264-D03 is a highly integrated 1200 channel outputs source driver with TTL interface Timing Controller for color TFT-LCD panels. HX8264-D03 integrated source driver, timing controller and pin control interface.

Input timing supports TTL digital 24-bit parallel RGB data format, and source output supports 16M colors with dithering features. Operating parameters can be set via pin control for all control features. Special circuit architecture is designed for low power dissipation.

HX8264-D03 supports two chip cascade operation mode to reduce the FPC amount and save the cost. Configurable Master and Slave configuration increase the flexibility for different panel design. With wide range of supply voltages and small output deviations make this chip more suitable for various applications.

HX8264-D03 supports single or double gate operation mode.

2. Features

- Special design for small-sized color TFT LCD source drivers with timing controller
- Integrated 1200 channel source driver
- Support display resolutions: 800(RGB) x600, 800(RGB) x480, 640(RGB) x480, 400(RGB) x240
- Support 16M colors with 2-bits dithering
- Support TTL 24-bit parallel (RGB) input timing
- Support data inverted function for normally black LCD
- Support 2 gamma curve for normally white or normally black LCD
- Support content adaptive brightness control (CABC) function
- Support cascade function with bidirectional shift control (CMOS signal)
- Support single or dual-gate operation mode
- Support delta or stripe color filter configuration
- Support stand-by mode for low power consumption
- Support dot inversion driving scheme for single gate operation mode
- V1~V14 for adjusting Gamma correction
- Output dynamic range:0.1~VDDA-0.1V
- Power for source driver voltage VDDA:6.5V~13.5V
- Power for digital interface circuit VDD:2.7 ~ 3.6V
- Operating frequency: 50MHz (Max.)
- COG package

Himax Confidential
Do Not Copy

3. Block Diagram

3.1 Function block diagram

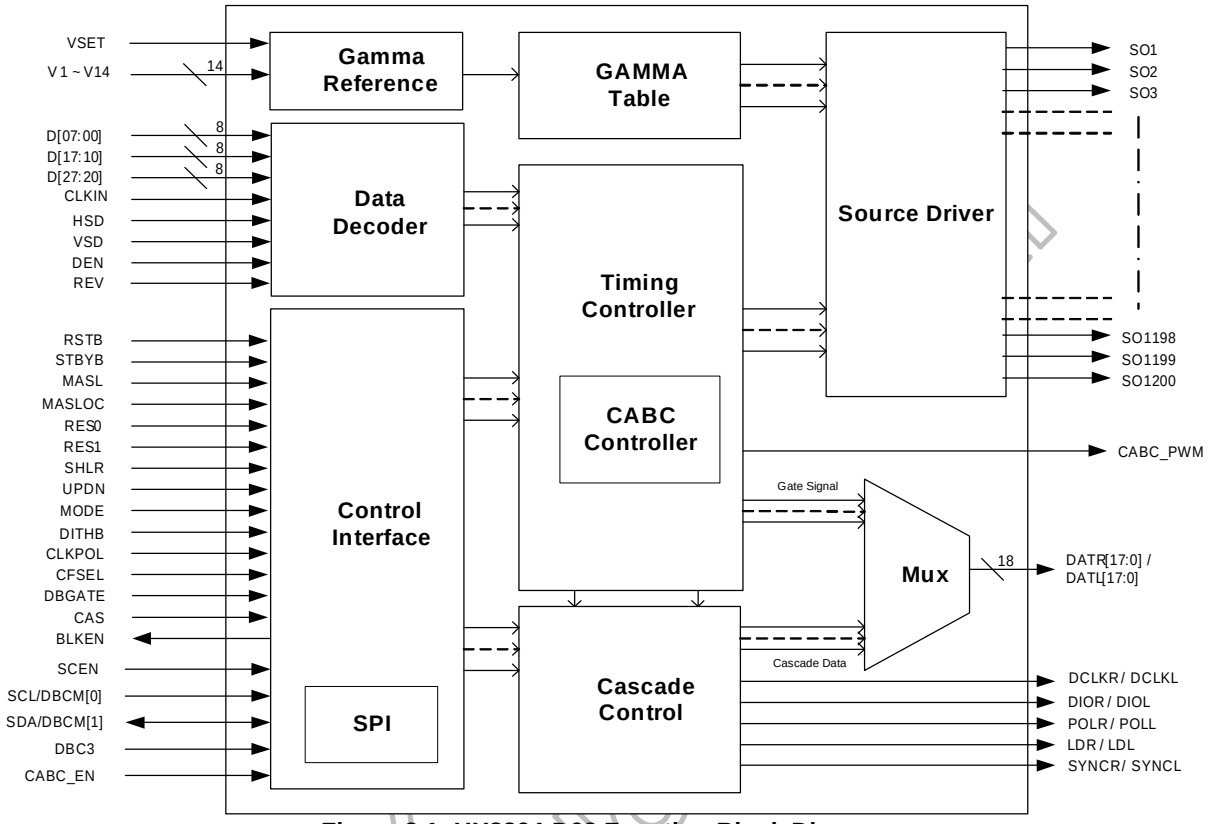

Figure 3.1: HX8264-D03 Function Block Diagram

Himax Do Not

3.2 Application block diagram

3.2.1 Single chip application

a. 400(RGB) x 240 (Gate driver on left side)

RES [1:0]=11
CAS=0
DBGATE=0

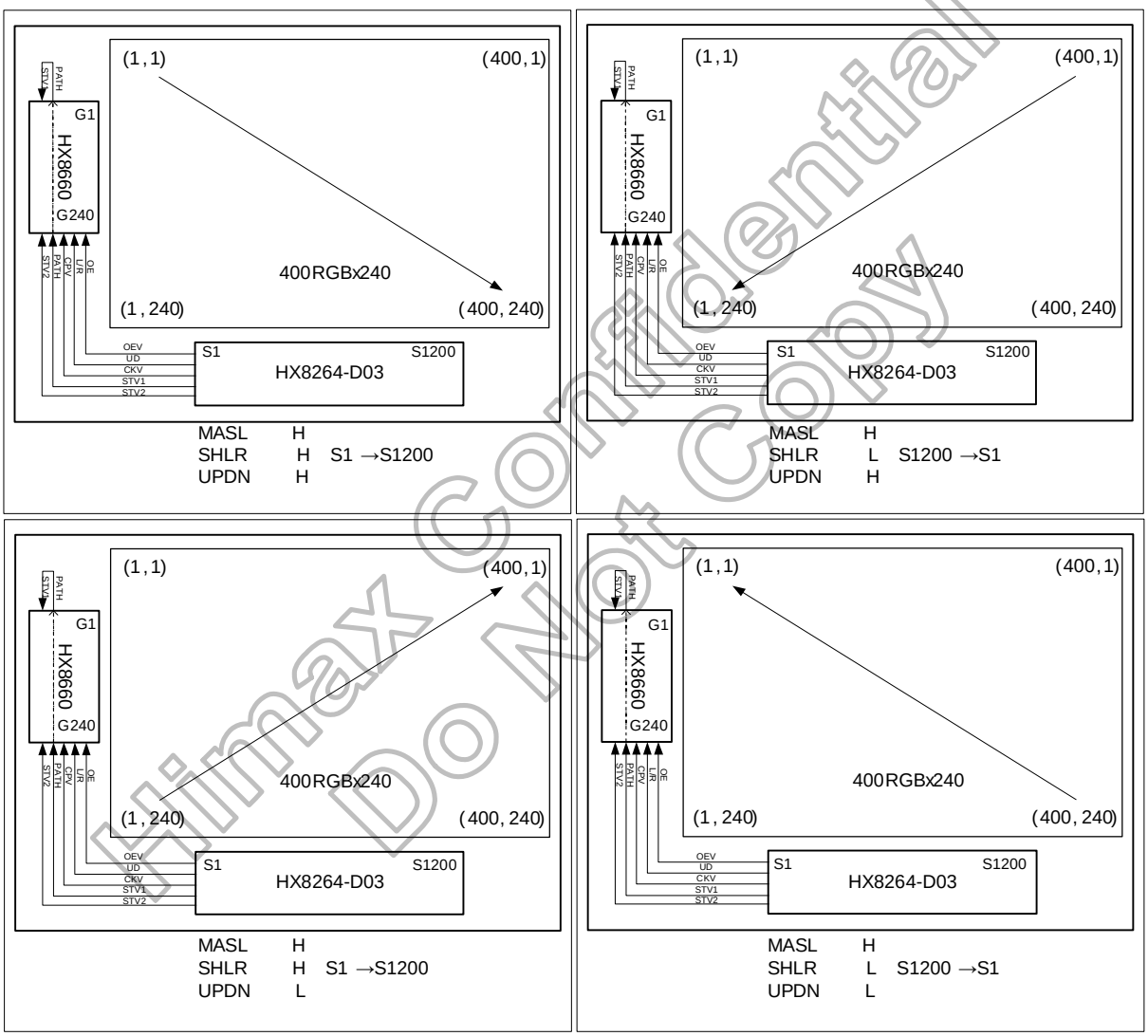

Figure 3.2: HX8264-D03 Single Chip 400(RGB) x 240 Application Block Diagram-1

Himax Confidential
Do Not Copy

b. 400(RGB) x 240 (Gate driver on right side)

RES [1:0]=11
CAS=0
DBGATE=0

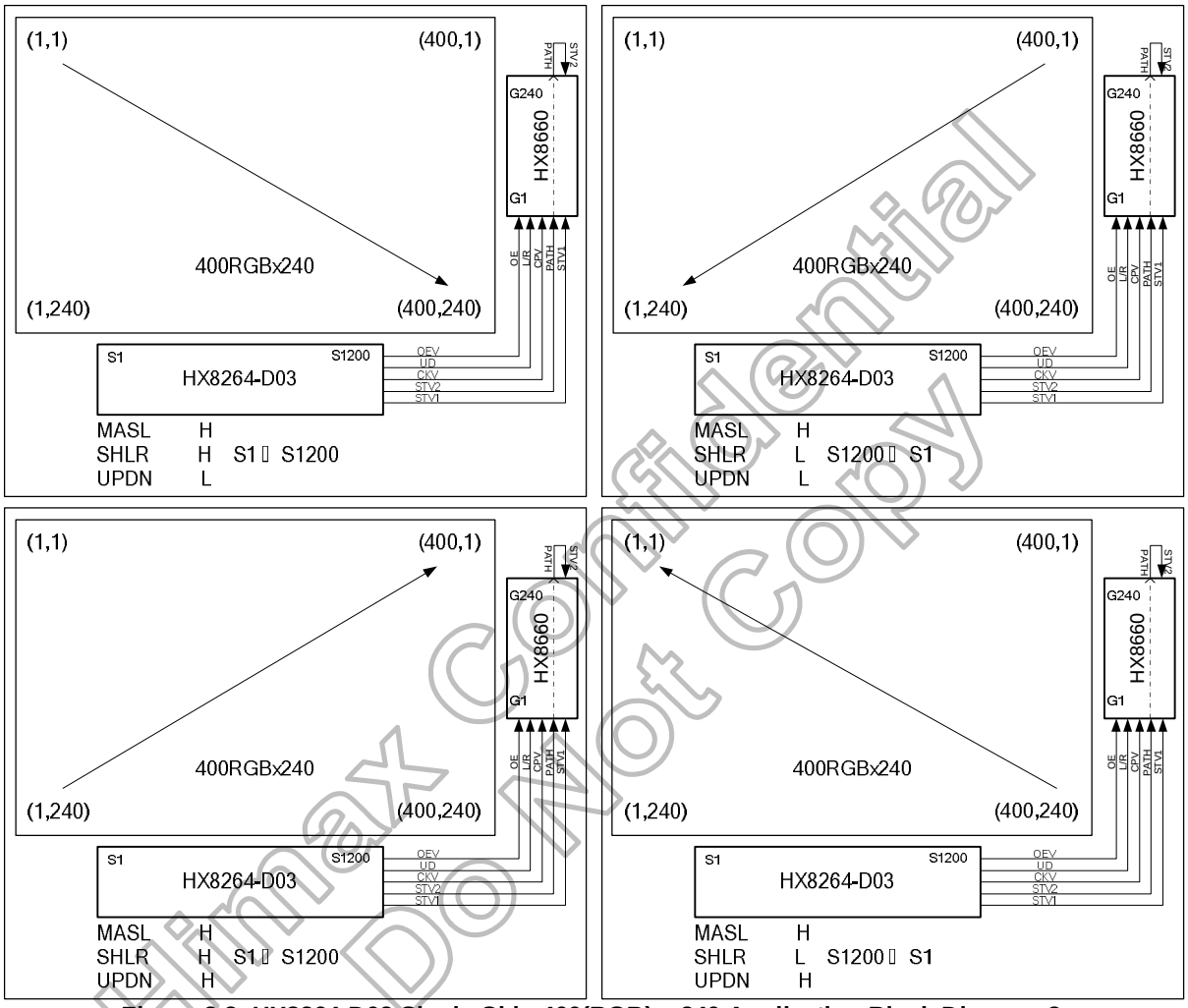

Figure 3.3: HX8264-D03 Single Chip 400(RGB) x 240 Application Block Diagram-2

Himax Confidential
Do Not Copy

This information contained herein is the exclusive property of Himax and shall not be distributed, reproduced, or disclosed in whole or in part without prior written permission of Himax.

3.2.2 Two chip cascade application

a. 800(RGB) x 480 (Gate driver on left side)

RES [1:0]=00
DBGATE=0

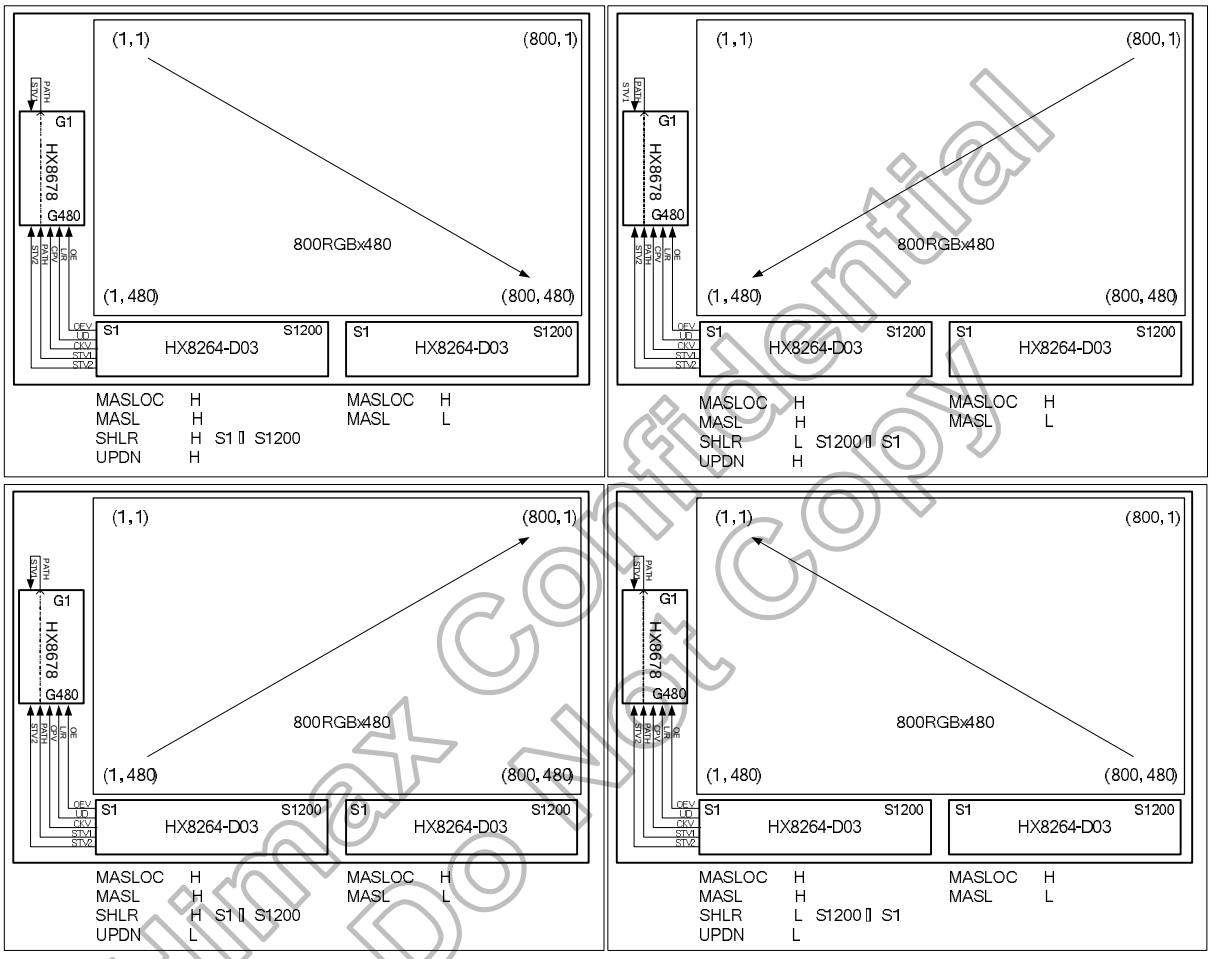

Figure 3.4: HX8264-D03 Two Chip Cascade 800(RGB) x 480 Application Block Diagram-1

Himax Confidential
Do Not Copy

b. 800(RGB) x 480 (Gate driver on right side)

RES [1:0]=00
DBGATE=0

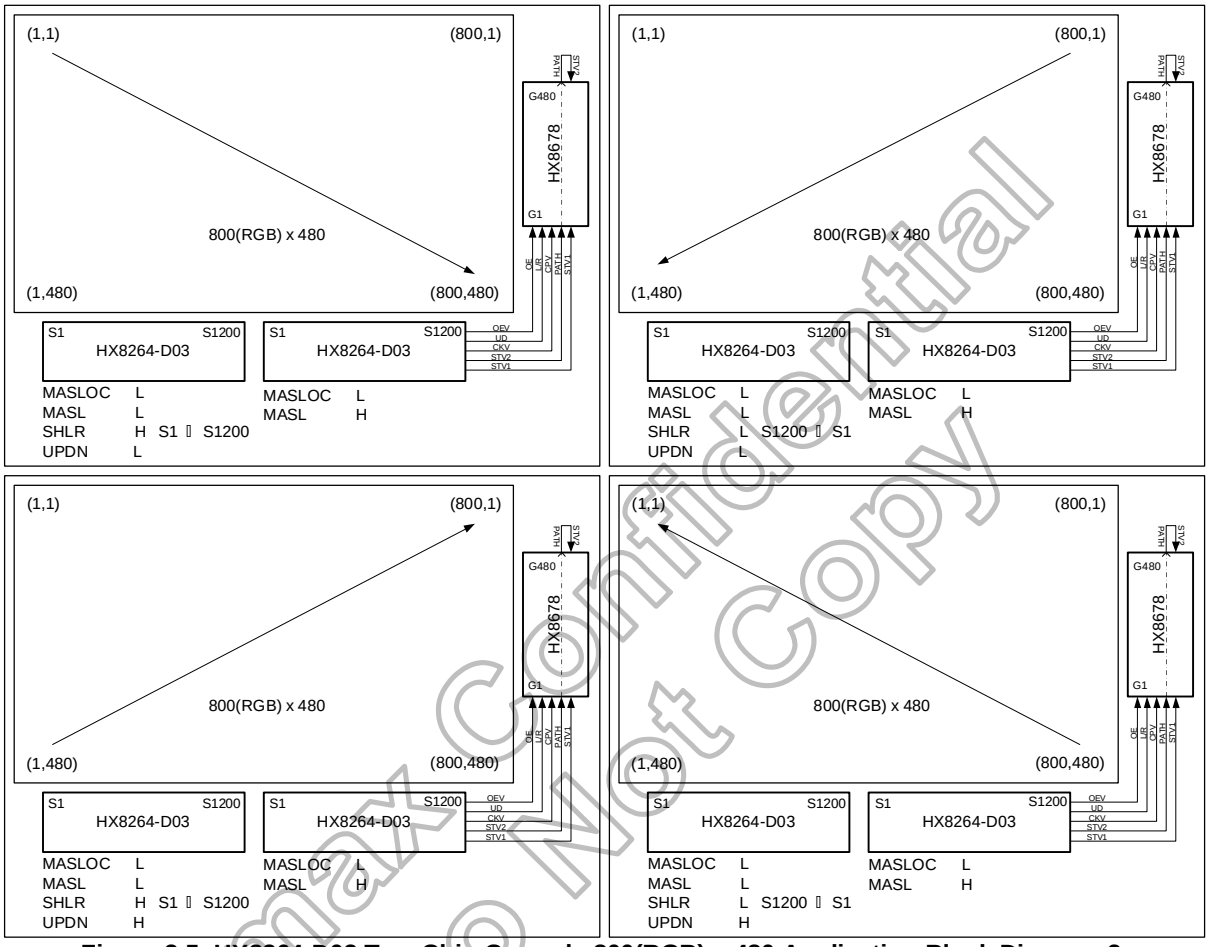

Figure 3.5: HX8264-D03 Two Chip Cascade 800(RGB) x 480 Application Block Diagram-2

Himax Confidential
Do Not Copy

c. 800(RGB) x 600 (Gate driver on left side)

RES [1:0]=01
DBGATE=0

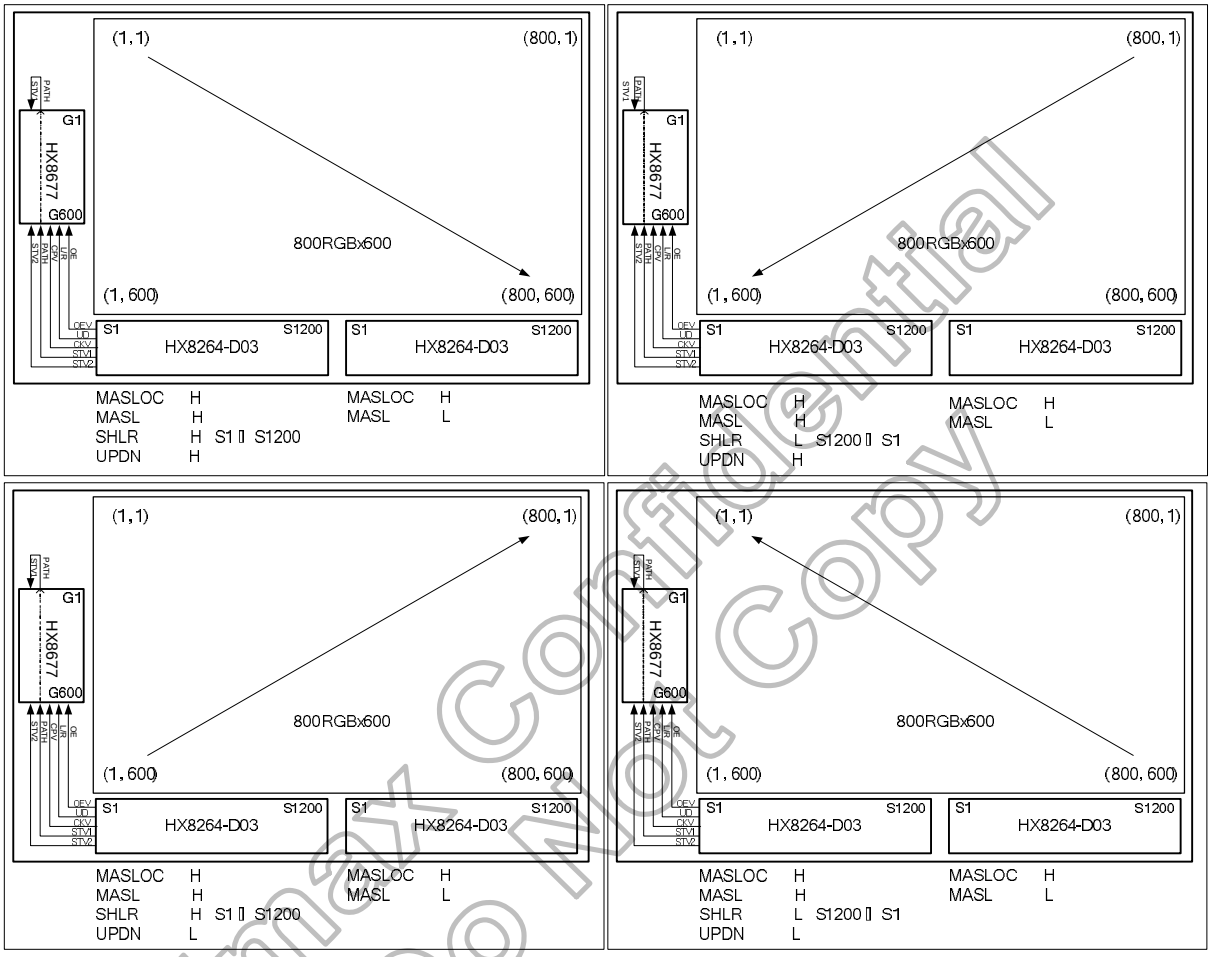

Figure 3.6: HX8264-D03 Two Chip Cascade 800(RGB) x 600 Application Block Diagram-1

Himax Confidential
Do Not Copy

d. 800(RGB) x 600 (Gate driver on right side)

RES [1:0]=01
DBGATE=0

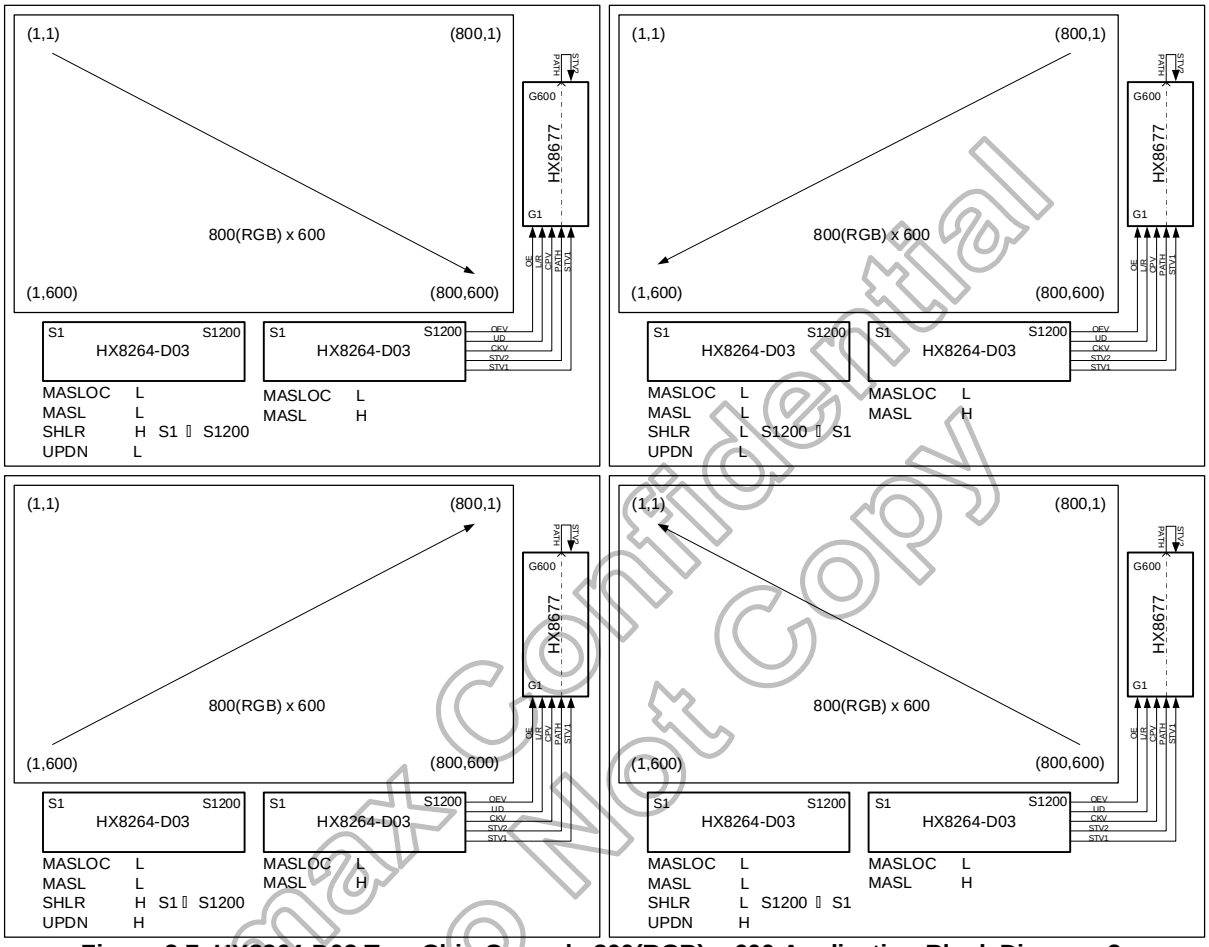

Figure 3.7: HX8264-D03 Two Chip Cascade 800(RGB) x 600 Application Block Diagram-2

Himax Confidential
Do Not Copy

e. 640(RGB) x 480 (Gate driver on left side)

RES [1:0]=10 (Master and slave IC must be setup)
DBGATE=0
Channel 481~720 is disable

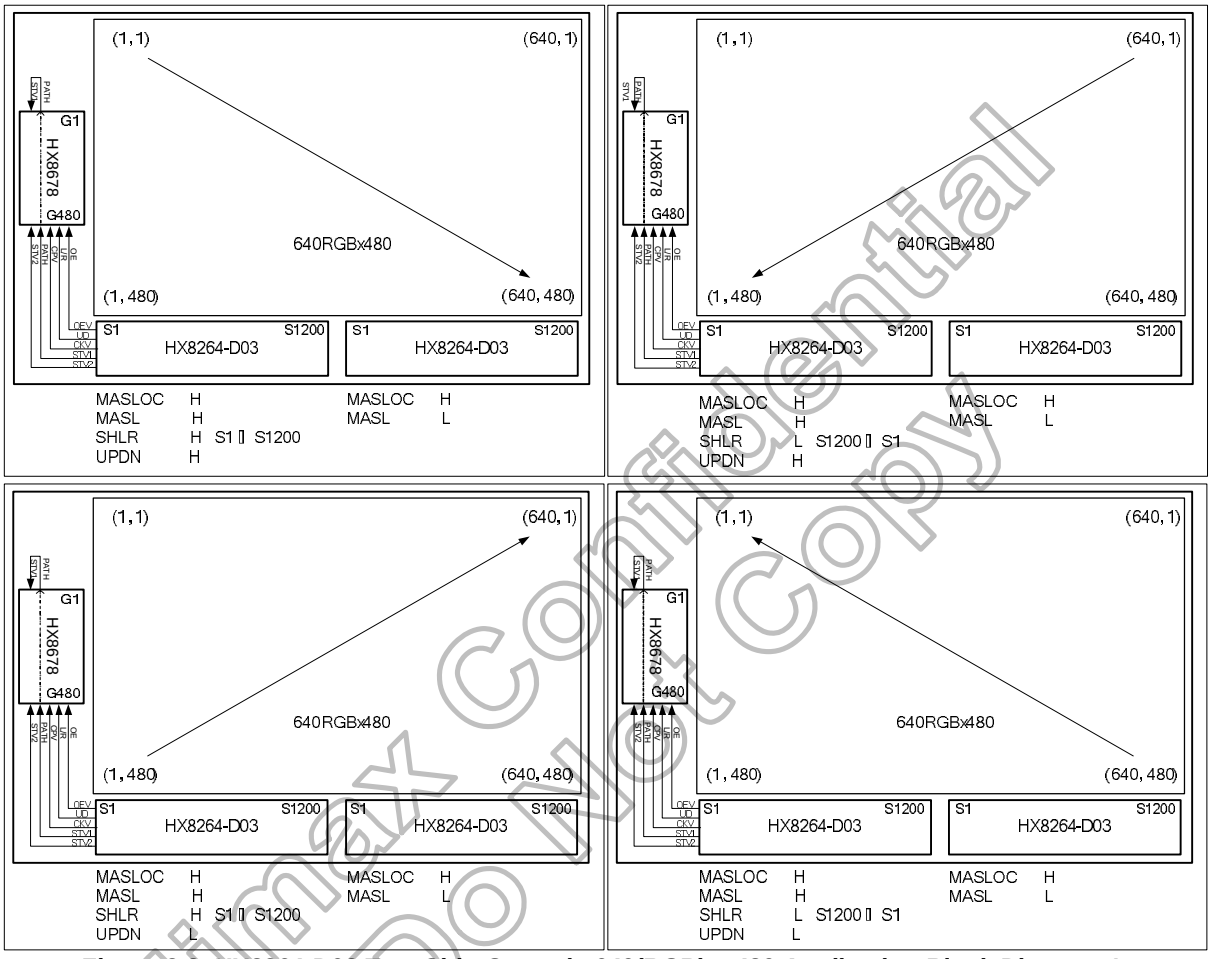

Figure 3.8: HX8264-D03 Two Chip Cascade 640(RGB) x 480 Application Block Diagram-1

Himax Confidential
Do Not Copy

This information contained herein is the exclusive property of Himax and shall not be distributed, reproduced, or disclosed in whole or in part without prior written permission of Himax.

f. 640(RGB) x 480 (Gate driver on right side)

RES [1:0]=10 (Master and slave IC must be setup)
DBGATE=0
Channel 481~720 is disable

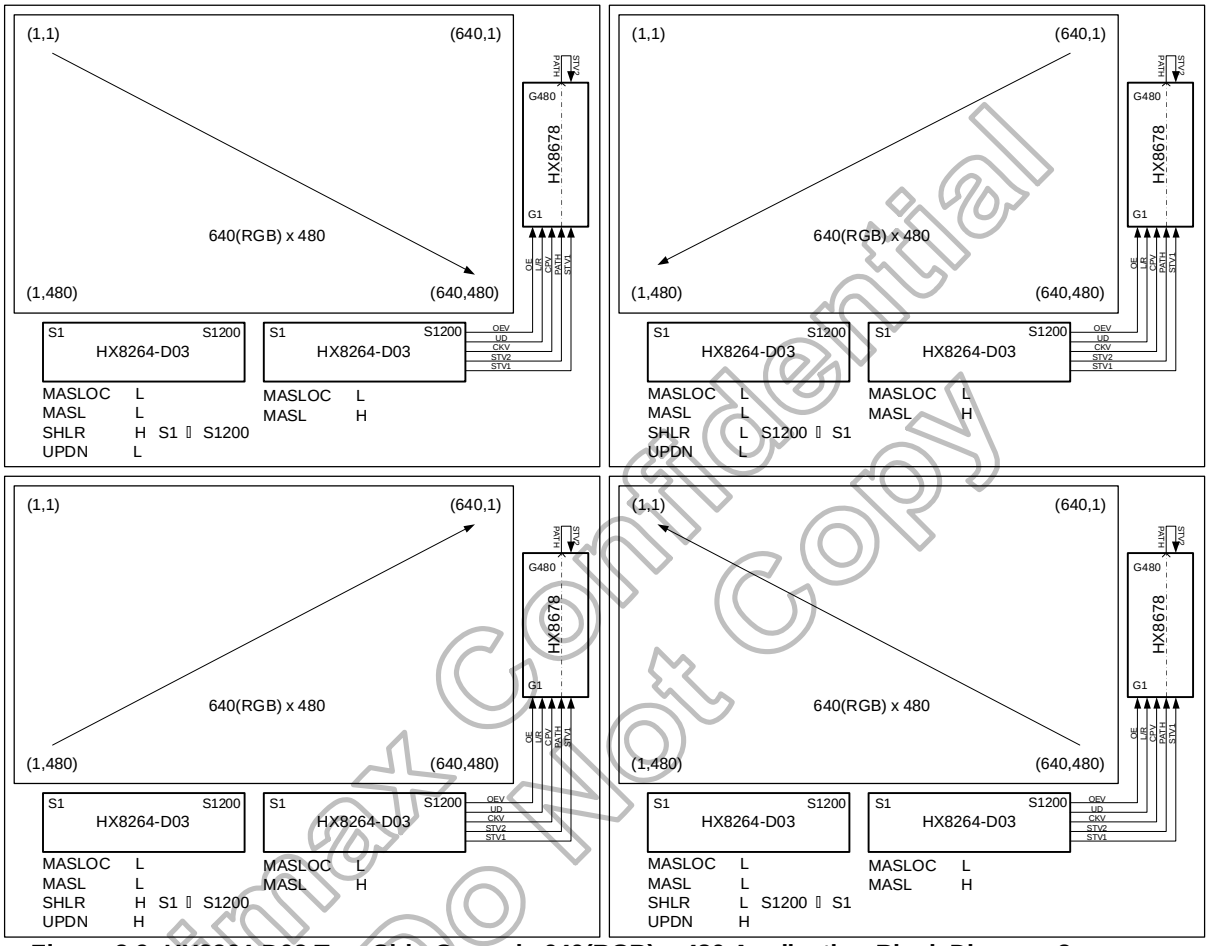

Figure 3.9: HX8264-D03 Two Chip Cascade 640(RGB) x 480 Application Block Diagram-2

Himax Confidential
Do Not Copy

This information contained herein is the exclusive property of Himax and shall not be distributed, reproduced, or disclosed in whole or in part without prior written permission of Himax.

3.2.3 Dual gate application

a. 800(RGB) x 480 (Gate driver on left side)

RES [1:0]=00
CAS=0
DBGATE=1

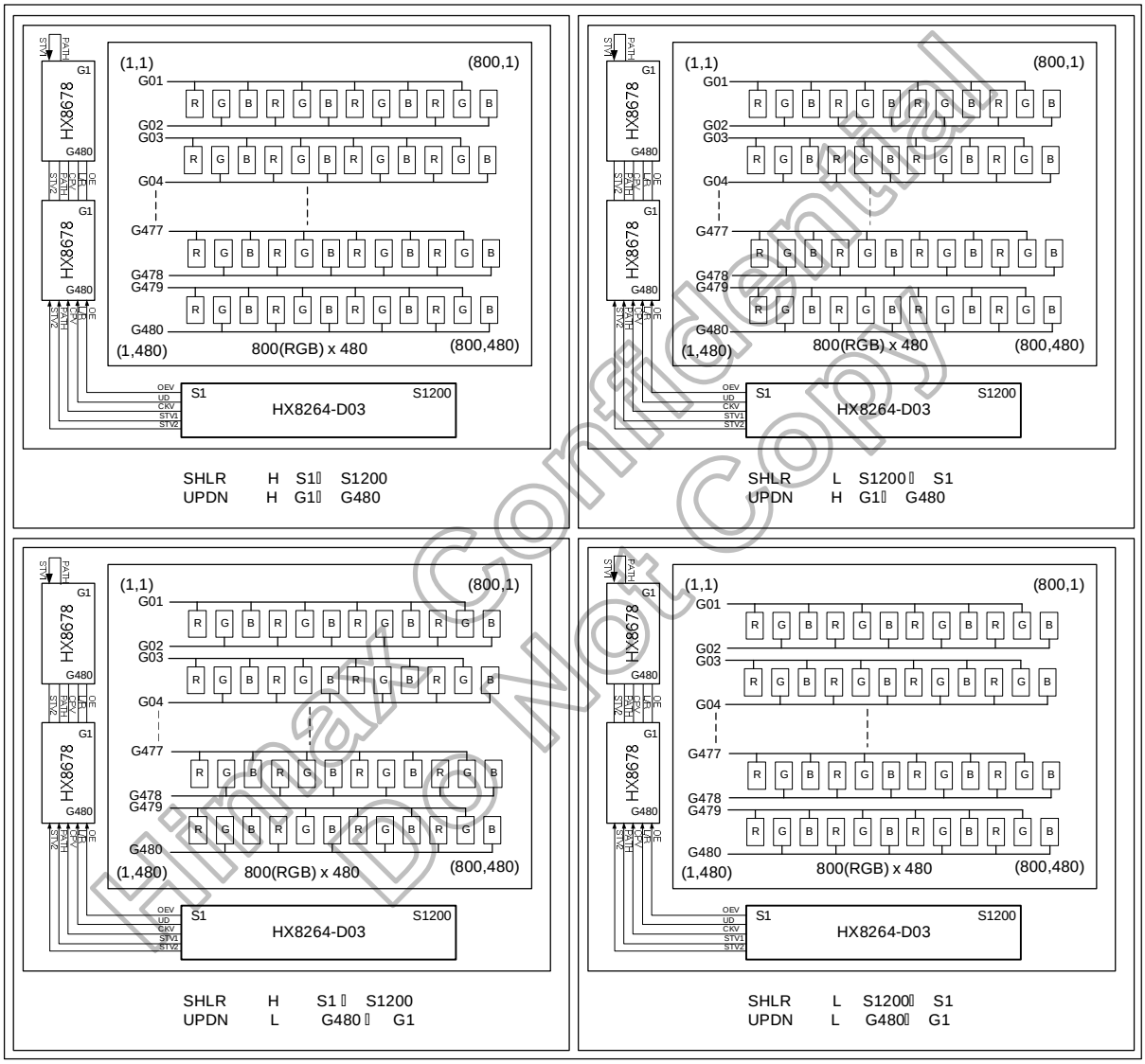

Figure 3.10: HX8264-D03 Dual Gate 800(RGB) x 480 Application Block Diagram-1

Himax Confidential
Do Not Copy

b. 800(RGB) x 480 (Gate driver on right side)

RES [1:0]=00
CAS=0
DBGATE=1

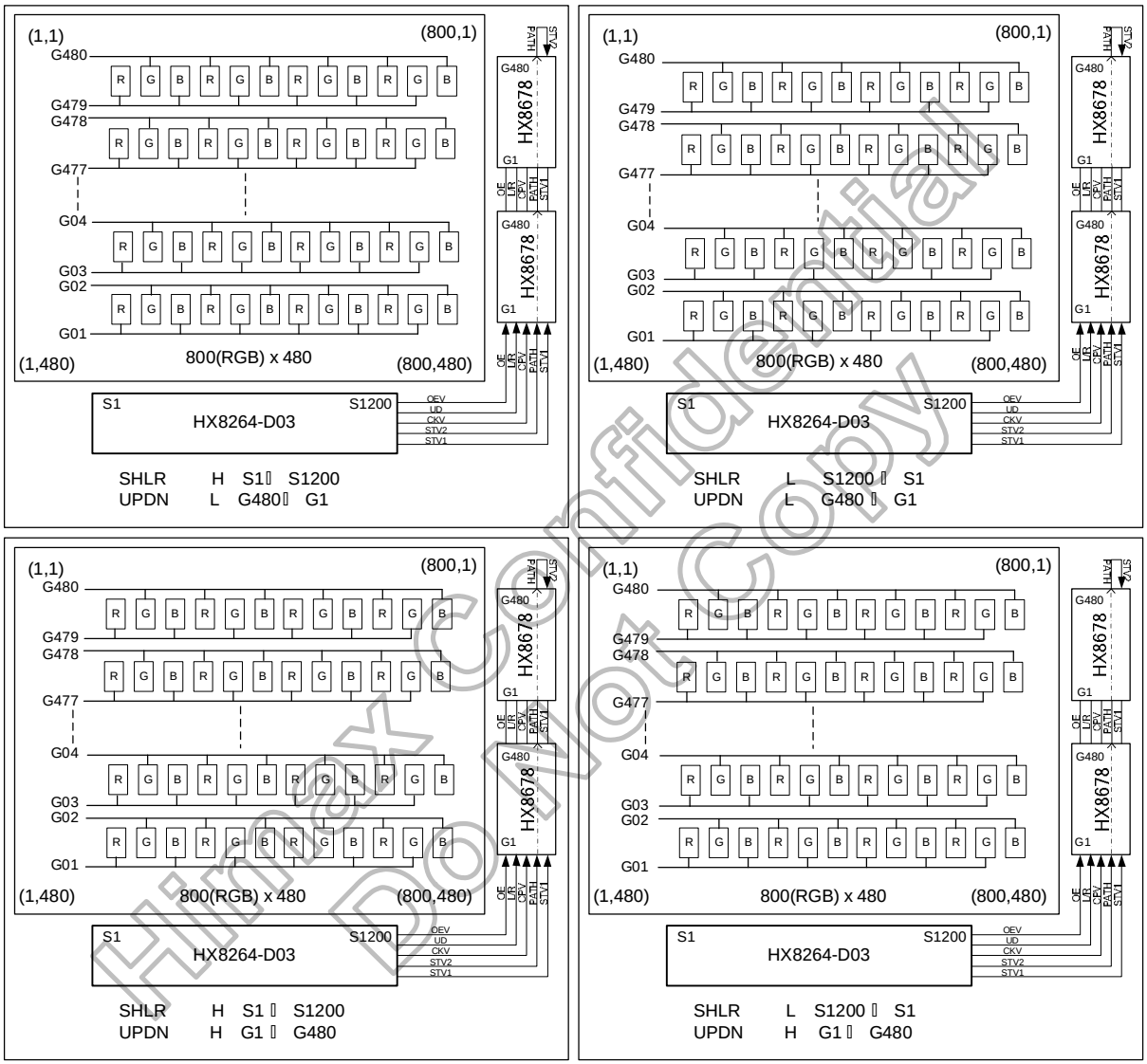

Figure 3.11: HX8264-D03 Dual Gate 800(RGB) x 480 Application Block Diagram-2

Himax Confidential
Do Not Copy

c. 800(RGB) x 600 (Gate driver on left side)

RES [1:0]=01
CAS=0
DBGATE=1

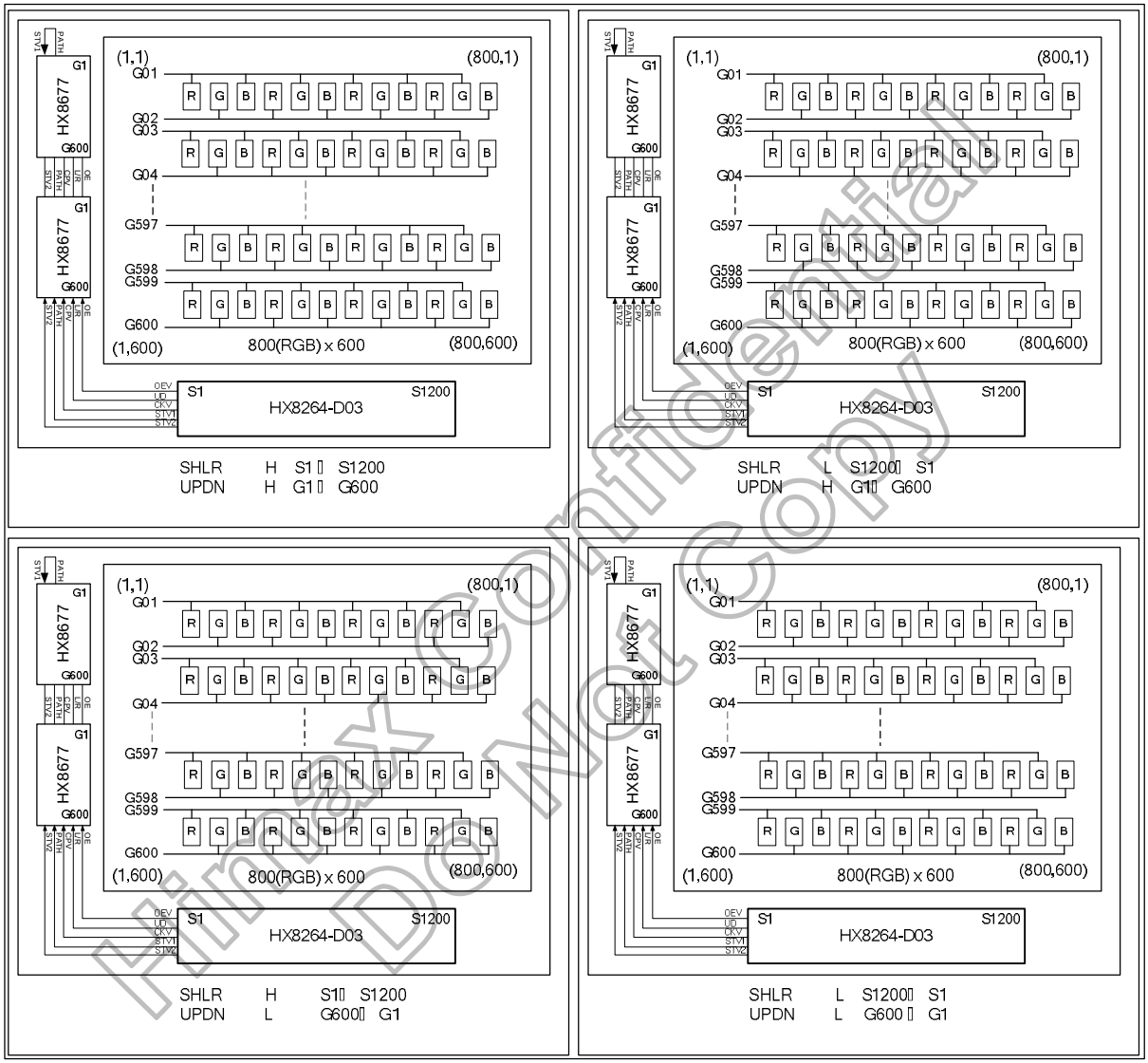

Figure 3.12: HX8264-D03 Dual Gate 800(RGB) x 600 Application Block Diagram-1

Himax Confidential
Do Not Copy

d. 800(RGB) x 600 (Gate driver on right side)

RES [1:0]=01
CAS=0
DBGATE=1

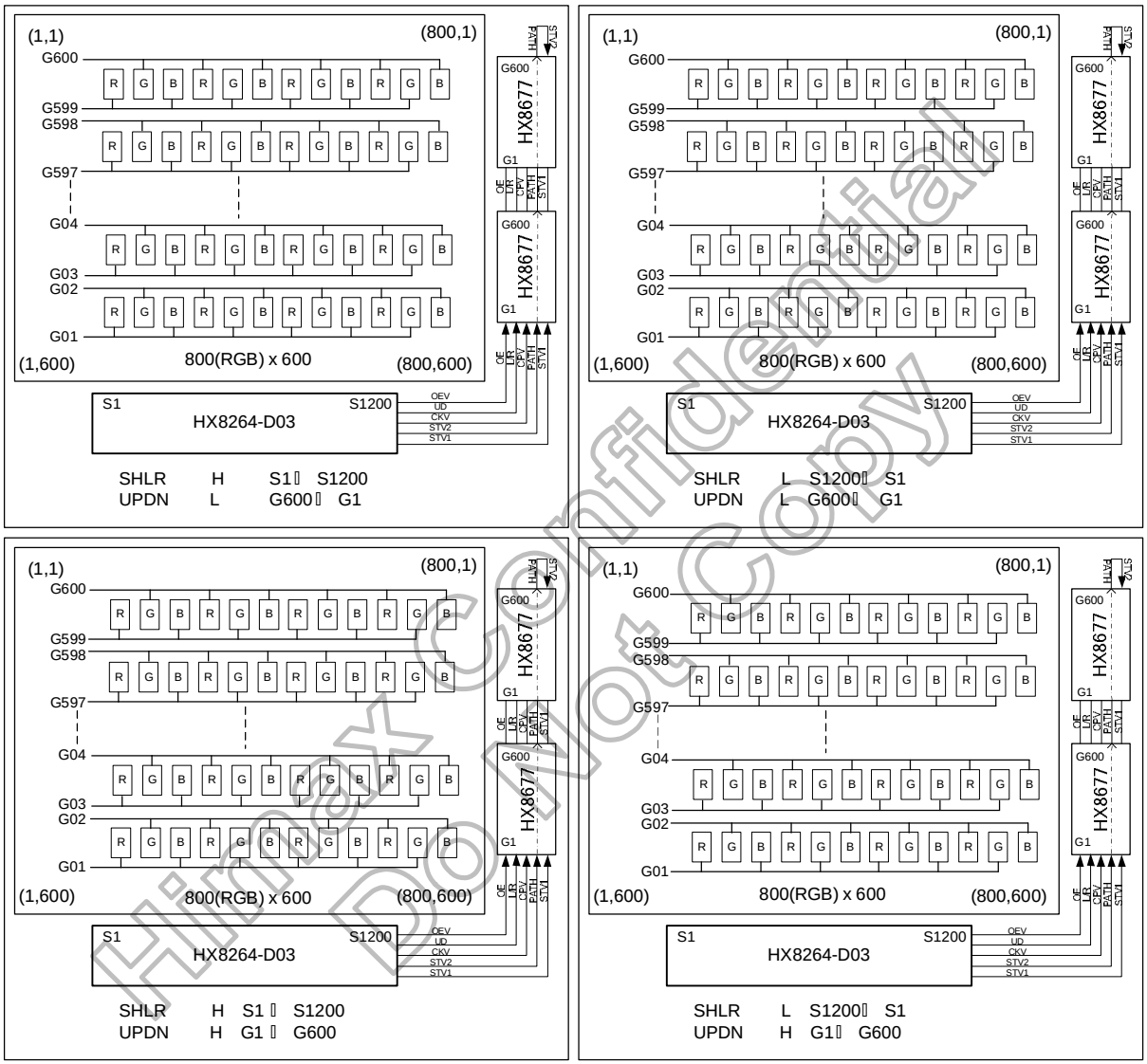

Figure 3.13: HX8264-D03 Dual Gate 800(RGB) x 600 Application Block Diagram-2

Himax Confidential
Do Not Copy

e. 640(RGB) x 480 (Gate driver on left side)

RES [1:0]=10
CAS=0
DBGATE=1
Channel 481~720 is disable

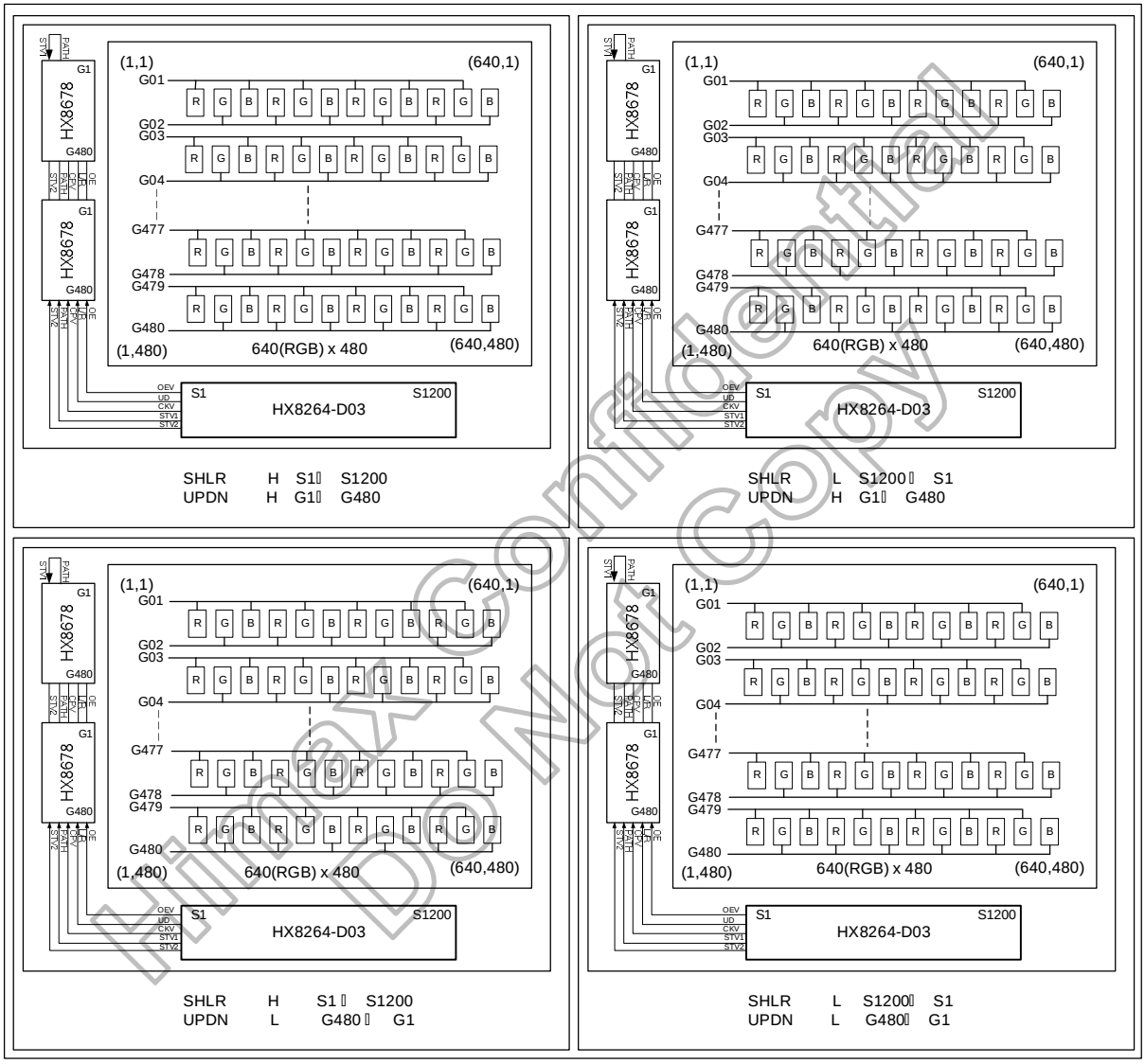

Figure 3.14: HX8264-D03 Dual Gate 640(RGB) x 480 Application Block Diagram-1

Himax Confidential
Do Not Copy

f. 640(RGB) x 480 (Gate driver on right side)

RES [1:0]=10
CAS=0
DBGATE=1
Channel 481~720 is disable

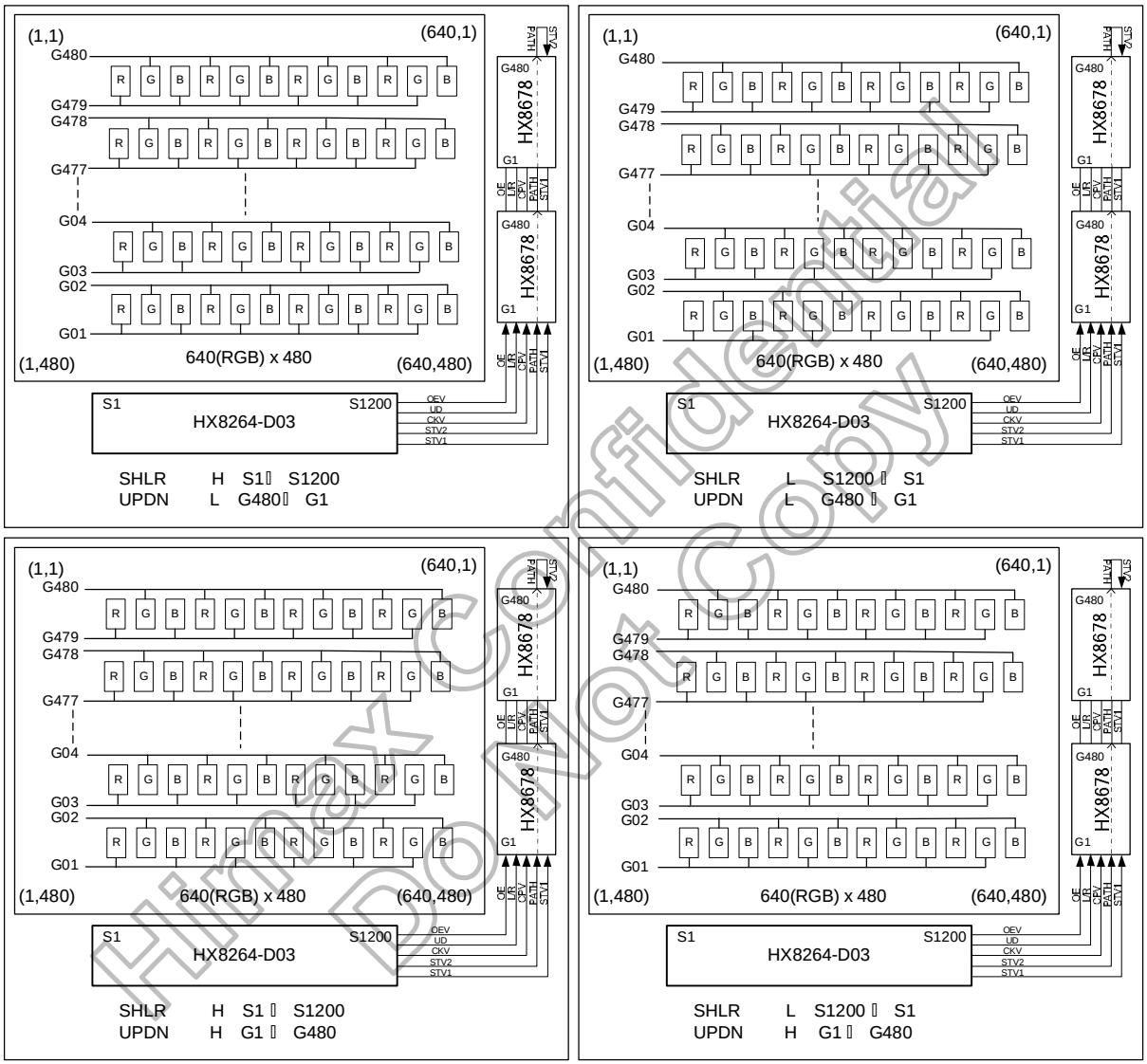

Figure 3.15: HX8264-D03 Dual Gate 640(RGB) x 480 Application Block Diagram-2

Himax Confidential
Do Not Copy

4. Pin Description

HX8264-D03 pin description

Pin name	I/O	Description
D07~D00 D17~D10 D27~D20	I	Parallel data input. For TTL 24-bit parallel RGB image data input. D[07:00]=R[7:0] data; D[17:10]=G[7:0] data; D[27:20]=B[7:0] data. For 18-bit RGB interface, connect two LSB bits of all the R/G/B data buses to VSS.
CLKIN	I	Clock for input data. Data latched at rising/falling edge of this signal. Default falling edge. Normally pull low.
HSD	I	Horizontal sync input. Negative polarity. Normally pull high.
VSD	I	Vertical sync input. Negative polarity. Normally pull high.
DEN	I	Data input enable. Active high to enable the data input bus under "DE Mode ". Normally pull low.
MODE	I	DE/SYNC mode select. Normally pull high. MODE="1": DE mode. (Default) MODE="0": HSD/VSD mode.
REV	I	Data inverted control. Normally pull low REV="1": Data inverted for normally black LCD REV="0": Data not inverted for normally white LCD. (Default)
RES[1:0]	I	Display resolution selection. Normally pull low RES[1:0]="00": For 800(RGB)*480 display resolution. (Default) RES[1:0]="01": For 800(RGB)*600 display resolution. RES[1:0]="10": For 640(RGB)*480 display resolution. RES[1:0]="11": For 400(RGB)*240 display resolution. Note: When RES[1:0]="10" , channel 481~720 is disable
SCEN	I	Serial Interface chip enable signal. Normally pull high SCEN="0": The chip is selected (accessible) SCEN="1": The chip is not selected (inaccessible) (Default) Note: Fix to the VDD level if no used
SCL/DBCM[0]	I	Multi function I/O pin. Normally pull high When DBC3="1", this pin is SCL function (Default) When DBC3="0", this pin is DBCM[0]function Note: Fix to the VDD level if no used
SDA/DBCM[1]	I/O	Multi function I/O pin. Normally pull high When DBC3="1", this pin is SDA function (Default) When DBC3="0", this pin is DBCM[1] function Note: Fix to the VDD level if no used
DBC3	I	CABC control by hardware or SPI selection. Normally pull high DBC3="0": CABC control by hardware DBC3="1": CABC control by SPI software (Default)
DITHB	I	Dithering function enable control. Normally pull high. DITHB="1": Disable internal dithering function. (Default) DITHB="0": Enable internal dithering function.
CLKPOL	I	Input clock edge selection. Normally pull low. CLKPOL="1": Latch data at CLKIN rising edge. CLKPOL="0": Latch data at CLKIN falling edge. (Default)

Himax Confidential
Do not copy

This information contained herein is the exclusive property of Himax and shall not be distributed, reproduced, or disclosed in whole or in part without prior written permission of Himax.

CFSEL	I	Color filter type selection. Normally pull low. CFSEL="0 ": Stripe mode. (Default) CFSEL="1 ": Delta mode.
BLKEN	O	Backlight enable control signal for external controller. BLKEN="1": Logical control signal to turn on external backlight controller. BLKEN="0": Turn off external backlight controller. Note: Refer to the power on/off sequence for the detail information.
CABC_EN	I	CABC Function Enable Control. Normally pull low CABC_EN="0": CABC function disable, the CABC_PWM pin will output low level to turn off external backlight controller. CABC_EN="1": CABC_PWM pin will refer the gray scale content of display image to output a PWM pulse to backlight driver
CABC_PWM	O	CABC PWM output
DBGATE	I	Dual gate function enables control. Normally pull low. DBGATE="1": Enable Dual Gate Function. DBGATE="0": Disable Dual Gate Function. (Default) Note: Cascade function will be disabled under "dual gate" mode!
V1 ~ V14	I	Gamma correction reference voltage. These input voltage must be offered by user. VSSA< V14 < V13 < V12 < V11 < V10 < V9 < V8 ; V7 < V6 < V5 < V4 < V3 < V2 < V1 < VDDA. Please make sure VDDA-1>V1.
VSET	I	Gamma voltage input selection. Normally pull low. VSET="0": 10 gamma voltage input, V2, V6, V9, V13 is disable. (Default) VSET="1": V1~V14 gamma voltage input.
RSTB	I	Global reset pin. Active low to enter Reset State. Suggest to connecting with an RC reset circuit for stability. Normally pull high.
STBYB	I	Standby mode. Normally pulled high. STBYB="1": Normally operation (Default) STBYB="0": Timing controller, source driver will turn off ,all output are High-Z.
MASL	I	Master and slave mode selection. Normally pulled high. MASL="1": For master mode. (Default) MASL="0": For slave mode. Only the master chip will issue the gate and cascade control signal.
MASLOC	I	Master location definition pin. Normally pull low. MASLOC="0": Master locate on right side (Panel top view).(Default) MASLOC="1": Master locate on left side (Panel top view).
SHLR	I	Source Right or Left sequence control. Normally pulled high. SHLR="0": Shift left: last data=S1 ß S2 ß S3..... ßS1200=first data. SHLR="1": Shift right: first data=S1 à S2 à S3..... à S1200=last data.
UPDN	I	Gate up or down scan control. Normally pulled low. UPDN="0": STV2 output vertical start pulse and UD pin output logical "0" to gate driver. (Default) UPDN="1": STV1 output vertical start pulse and UD pin output logical "1" to gate driver.

Himax Confidential
Do Not Copy

This information contained herein is the exclusive property of Himax and shall not be distributed, reproduced, or disclosed in whole or in part without prior written permission of Himax.

BIST	I	Normal operation/BIST pattern select. Normally pull low. BIST="1": BIST (DCLK input is not needed.) BIST="0": Normal operation. (Default) When BIST="1", CABC function will turn off, CABC_PWM keep high
CAS	I	Cascade function select. Normally pull high. CAS="1": Enable cascade function. (Default) CAS="0": Disable cascade function.
DATR[17:0]	I/O	Multi function I/O pin. Refer to the cascade DAT pin mapping table for the detail.
DCLKR	I/O	Master and slave cascade control signal.
DIOR	I/O	Master and slave cascade control signal.
POLR	I/O	Master and slave cascade control signal.
LDR	I/O	Master and slave cascade control signal.
SYNCR	I/O	Master and slave cascade control signal.
DATL[17:0]	I/O	Multi function I/O pin. Refer to the cascade DAT pin mapping table for the detail.
DCLKL	I/O	Master and slave cascade control signal.
DIOL	I/O	Master and slave cascade control signal.
POLL	I/O	Master and slave cascade control signal.
LDL	I/O	Master and slave cascade control signal.
SYNCL	I/O	Master and slave cascade control signal.
VDDA	PI	Power supply for analog circuits.
VSSA	PI	Ground pins for analog circuits.
VDD	PI	Power supply for digital circuits.
VSS	PI	Ground pins for digital circuits.
SO1~SO1200	O	Source driver output signals. All outputs will be of unknown values under stand-by mode.
ALIGN	M	For assembly alignment.
COM1_B COM2_B	S	Internal link together between input side and output side.
COM1_T COM2_T	S	Internal link together between input side and output side.
TP9~0	T	Test pin for Himax only. Float these pins for normal operation.
TESTG	T	Test pin for Himax only. Float this pin for normal operation.
SHIELDING	SH	IC shielding pads. Those pins are internally connected to the VSSA. DO NOT connect to any WOA on the panel.
DASHD	SH	Data bus shielding pad. Those pins are internally connected to the VSS. Recommend to add shielding lines on the FPC to reduce EMI.

Note: I: Input, **O:** Output, **P:** Power, **D:** Dummy, **S:** Shorted line, **M:** Mark, **PI:** Power input, **PO:** Power output, **T:** Testing, **SH:** Shielding, **I/O:** Input/Output, **PS:** Power Setting, **C:** Capacitor Pin.

Himax Confidential
Do Not Copy

HX8264-D03 passes line description

Pass Line No:	Pin Name	
1	COM1_B	COM1_T
2	COM2_B	COM2_T

Table 4.1: HX8264-D03 Pass Line Description

Value of wiring resistance to each pin

The recommended wiring resistance values are shown below. The wiring resistance values affect.
The current capacity of the power supply, so be sure to design using values that do not exceed those recommended.

Pin Name	Wiring resistance value(Ω)
VDD	< 25
VDDA	< 5
VSS	< 25
VSSA	< 5
V1~V14	< 20
D00~D07	< 200
D10~D17	< 200
D20~D27	< 200
DEN	< 200
MODE	< 1000
RES[1:0]	< 1000
DITHB	< 1000
CLKPOL	< 1000
BLKEN	< 1000
CFSEL	< 1000
DBGATE	< 1000
RSTB	< 1000
MASL	< 1000
MASLOC	< 1000
SHLR	< 1000
UPDN	< 1000
BIST	< 1000
CAS	< 1000
SCEN	< 200
SCL/DBCM[0]	< 200
SDA/DBCM[1]	< 200
DBC3	<1000
DATR[17:0]	< 200 & 20 pF
DCLKR	< 200 & 20 pF
DIOR	< 200 & 20 pF
POLR	< 200 & 20 pF
LDR	< 200 & 20 pF
SYNCR	< 200 & 20 pF
DATRL[17:0]	< 200 & 20 pF
DCLKL	< 200 & 20 pF
DIOL	< 200 & 20 pF
POLL	< 200 & 20 pF
LDL	< 200 & 20 pF
CASCADE V1~V14	< 50
CLKIN	< 50
HSD	< 200
VSD	< 200

Table 4.2: The Recommended Wiring Resistance Values

Himax Confidential
Do Not Copy

This information contained herein is the exclusive property of Himax and shall not be distributed, reproduced, or disclosed in whole or in part without prior written permission of Himax.

5. Operation Description

5.1 Relationship between input data and output channels

I DBGATE="0", CFSEL="0", stripe mode

(1) SHLR="1", right shift

Output	Out1	Out2	Out3	•••	Out1198	Out1199	Out1200
Order	First Data			à	Last Data		
Odd Line	D07~D00	D17~D10	D27~D20	•••	D07~D00	D17~D10	D27~D20
Even Line	D07~D00	D17~D10	D27~D20	•••	D07~D00	D17~D10	D27~D20

(2) SHLR="0", left shift

Output	Out1	Out2	Out3	•••	Out1198	Out1199	Out1200
Order	Last Data			ß	First Data		
Odd Line	D07~D00	D17~D10	D27~D20	•••	D07~D00	D17~D10	D27~D20
Even Line	D07~D00	D17~D10	D27~D20	•••	D07~D00	D17~D10	D27~D20

I DBGATE="0", CFSEL="1", delta mode

(1) SHLR="1", right shift

Output	Out1	Out2	Out3	•••	Out1198	Out1199	Out1200
Order	First Data			à	Last Data		
Odd Line	D07~D00	D17~D10	D27~D20	•••	D07~D00	D17~D10	D27~D20
Even Line	D17~D10	D27~D20	D07~D00	•••	D17~D10	D27~D20	D07~D00

(2) SHLR="0", left shift

Output	Out1	Out2	Out3	•••	Out1198	Out1199	Out1200
Order	Last Data			ß	First Data		
Odd Line	D07~D00	D17~D10	D27~D20	•••	D07~D00	D17~D10	D27~D20
Even Line	D17~D10	D27~D20	D07~D00	•••	D17~D10	D27~D20	D07~D00

Himax Confidential
Do Not Copy

I DBGATE="1", CFSEL="0", stripe mode

(1) SHLR="1", right shift

Output	Out1	Out2	Out3	•••	Out1198	Out1199	Out1200
Order	First Data			à	Last Data		
Odd Line /Gn	D07~D00	D27~D20	D17~D10	•••	D07~D00	D27~D20	D17~D10
Odd Line /Gn+1	D17~D10	D07~D00	D27~D20	•••	D17~D10	D07~D00	D27~D20
Even Line /Gn	D07~D00	D27~D20	D17~D10	•••	D07~D00	D27~D20	D17~D10
Even Line /Gn+1	D17~D10	D07~D00	D27~D20	•••	D17~D10	D07~D00	D27~D20

(2) SHLR="0", left shift

Output	Out1	Out2	Out3	•••	Out1198	Out1199	Out1200
Order	Last Data			ß	First Data		
Odd Line /Gn	D07~D00	D27~D20	D17~D10	•••	D07~D00	D27~D20	D17~D10
Odd Line /Gn+1	D17~D10	D07~D00	D27~D20	•••	D17~D10	D07~D00	D27~D20
Even Line /Gn	D07~D00	D27~D20	D17~D10	•••	D07~D00	D27~D20	D17~D10
Even Line /Gn+1	D17~D10	D07~D00	D27~D20	•••	D17~D10	D07~D00	D27~D20

I DBGATE="1", CFSEL="1", delta mode

(1) SHLR="1", right shift

Output	Out1	Out2	Out3	•••	Out1198	Out1199	Out1200
Order	First Data			à	Last Data		
Odd Line /Gn	D07~D00	D27~D20	D17~D10	•••	D07~D00	D27~D20	D17~D10
Odd Line /Gn+1	D17~D10	D07~D00	D27~D20	•••	D17~D10	D07~D00	D27~D20
Even Line /Gn	D17~D10	D07~D00	D27~D20	•••	D17~D10	D07~D00	D27~D20
Even Line /Gn+1	D27~D20	D17~D10	D07~D00	•••	D27~D20	D17~D10	D07~D00

(2) SHLR="0", left shift

Output	Out1	Out2	Out3	•••	Out1198	Out1199	Out1200
Order	Last Data			ß	First Data		
Odd Line /Gn	D07~D00	D27~D20	D17~D10	•••	D07~D00	D27~D20	D17~D10
Odd Line /Gn+1	D17~D10	D07~D00	D27~D20	•••	D17~D10	D07~D00	D27~D20
Even Line /Gn	D17~D10	D07~D00	D27~D20	•••	D17~D10	D07~D00	D27~D20
Even Line /Gn+1	D27~D20	D17~D10	D07~D00	•••	D27~D20	D17~D10	D07~D00

Himax Confidential
Do Not Copy

5.2 HX8264-D03 configuration table

HX8264-D03 supports timing controllers for four resolutions. Since HX8264-D03 has 1200 channels, for example, two pieces of HX8264-D03 source drivers are cascaded and extended to 2400 channels of 800RGB. The configuration summary tables of the HX8264-D03 are illustrated as below two figures.

DATR[17:0]	DBGATE="0" MASL ="1" MASLOC="0" CAS="1"	DBGATE="0" MASL="1" MASLOC="1" CAS="1"	DBGATE="0" MASL="0" MASLOC="0" CAS="1"	DBGATE="0" MASL="0" MASLOC="1" CAS="1"	DBGATE="1" MASL="1" MASLOC="X" CAS="0"	DBGATE="0" MASL="1" MASLOC="X" CAS="0" RES[1:0]="XX"
Description	**Master mode. Master locates on panel right side.**	**Master mode. Master locates on panel left side.**	**Slave mode. Master locates on panel right side.**	**Slave mode. Master locates on panel left side.**	**Dual gate mode**	**Single source mode**
DATR0	X	DAT0	DAT0	X	X	X
DATR1	X	DAT1	DAT1	X	X	X
DATR2	OEV	DAT2	DAT2	X	OEV	OEV
DATR3	X	DAT3	DAT3	X	X	X
DATR4	UD	DAT4	DAT4	X	UD	UD
DATR5	X	DAT5	DAT5	X	X	X
DATR6	CKV	DAT6	DAT6	X	CKV	CKV
DATR7	X	DAT7	DAT7	X	X	X
DATR8	STV1	DAT8	DAT8	X	STV1	STV1
DATR9	X	DAT9	DAT9	X	X	X
DATR10	STV2	DAT10	DAT10	X	STV2	STV2
DATR11	X	DAT11	DAT11	X	X	X
DATR12	STV1	DAT12	DAT12	X	STV1	STV1
DATR13	X	DAT13	DAT13	X	X	X
DATR14	X	DAT14	DAT14	X	X	X
DATR15	X	DAT15	DAT15	X	X	X
DATR16	STBN	DAT16	DAT16	X	STBN	STBN
DATR17	X	DAT17	DAT17	X	X	X
DCLKR	X	DCLK	DCLK	X	X	X
DIOR	X	DIO	DIO	X	X	X
LDR	X	LD	LD	X	X	X
SYNCR	X	SYNC	SYNC	X	X	X

Table 5.1: HX8264-D03 DATR[17:0] Pin Mapping Table

Himax Confidential
Do Not Copy

DATL[17:0]	DBGATE="0" MASL ="1" MASLOC="0" CAS="1"	DBGATE="0" MASL="1" MASLOC="1" CAS="1"	DBGATE="0" MASL="0" MASLOC="0" CAS="1"	DBGATE="0" MASL="0" MASLOC="1" CAS="1"	DBGATE="1" MASL="1" MASLOC="X" CAS="0"	DBGATE="0" MASL="1" MASLOC="X" CAS="0" RES[1:0]="XX"
Description	**Master mode. Master locates on panel right side.**	**Master mode. Master locates on panel left side.**	**Slave mode. Master locates on panel right side.**	**Slave mode. Master locates on panel left side.**	**Dual gate mode**	**Single source mode**
DATL0	DAT0	X	X	DAT0	X	X
DATL1	DAT1	X	X	DAT1	X	X
DATL2	DAT2	OEV	X	DAT2	OEV	OEV
DATL3	DAT3	X	X	DAT3	X	X
DATL4	DAT4	UD	X	DAT4	UD	UD
DATL5	DAT5	X	X	DAT5	X	X
DATL6	DAT6	CKV	X	DAT6	CKV	CKV
DATL7	DAT7	X	X	DAT7	X	X
DATL8	DAT8	STV1	X	DAT8	STV1	STV1
DATL9	DAT9	X	X	DAT9	X	X
DATL10	DAT10	STV2	X	DAT10	STV2	STV2
DATL11	DAT11	X	X	DAT11	X	X
DATL12	DAT12	STV1	X	DAT12	STV1	STV1
DATL13	DAT13	X	X	DAT13	X	X
DATL14	DAT14	X	X	DAT14	X	X
DATL15	DAT15	X	X	DAT15	X	X
DATL16	DAT16	STBN	X	DAT16	STBN	STBN
DATL17	DAT17	X	X	DAT17	X	X
DCLKL	DCLK	X	X	DCLK	X	X
DIOL	DIO	X	X	DIO	X	X
LDL	LD	X	X	LD	X	X
SYNCL	SYNC	X	X	SYNC	X	X

Table 5.2: HX8264-D03 DATL[17:0] Pin Mapping Table

Himax Confidential
Do Not Copy

This information contained herein is the exclusive property of Himax and shall not be distributed, reproduced, or disclosed in whole or in part without prior written permission of Himax.

5.3 The BIST Pattern for Aging Mode Test

HX8264-D03 supports BIST pattern for aging mode test automatically. When external BIST pin set to “H” level, then HX8264-D03 will leave normal operation mode and starts to generate the BIST pattern to LCD panel without external clock signal. The CABC function will turn off and CABC_PWM output keep high level when BIST mode enable.

The BIST pattern is illustrated as below:

1	2	3
Red	Green	Blue
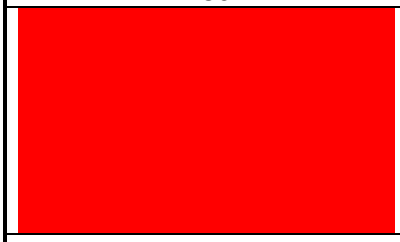		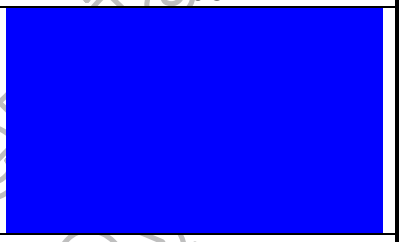
4	5	6
Black	White	Color Bar
		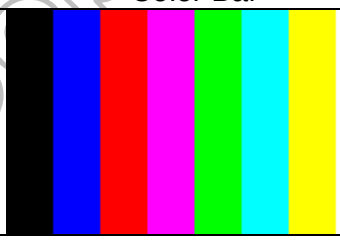
7	8	9
Vertical 64 gray scale	Horizontal 64 gray scale	Gray with black block
		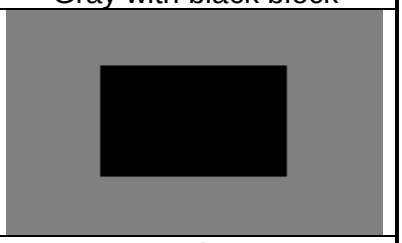
10	11	12
Gray with black dot	Gray with black line	Black with white frame
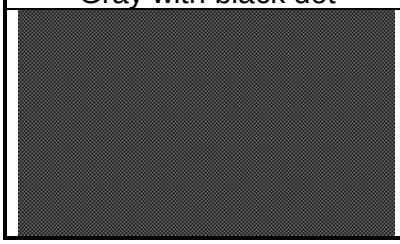		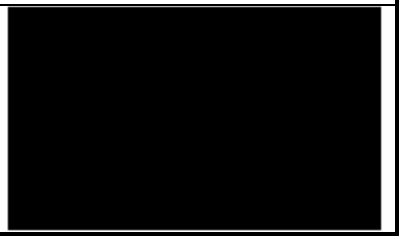

Himax Confidential
This information contained herein is the exclusive property of Himax and shall not be distributed, reproduced, or disclosed in whole or in part without prior written permission of Himax.

6. Gamma Adjustment Function

6.1 Relationship between gamma correction and output voltage

HX8264-D03 supports 2 gamma curve for normally white or normally black LCD depend on REV function pin. The output voltage is determined by the 6-bit DAC input data, and the V1 ~ V14 gamma correction reference voltage inputs.

Input code	Normally white LCD REV=L	Normally black LCD REV=H
00H	00H	3FH
0AH	0AH	35H
35H	35H	0AH
3FH	3FH	00H

Gamma correction characteristic curve:
VSET=0, 10 gamma voltage input, V2, V6, V9, V13 is disable (Default)
VSET=1, 14 gamma voltage input.

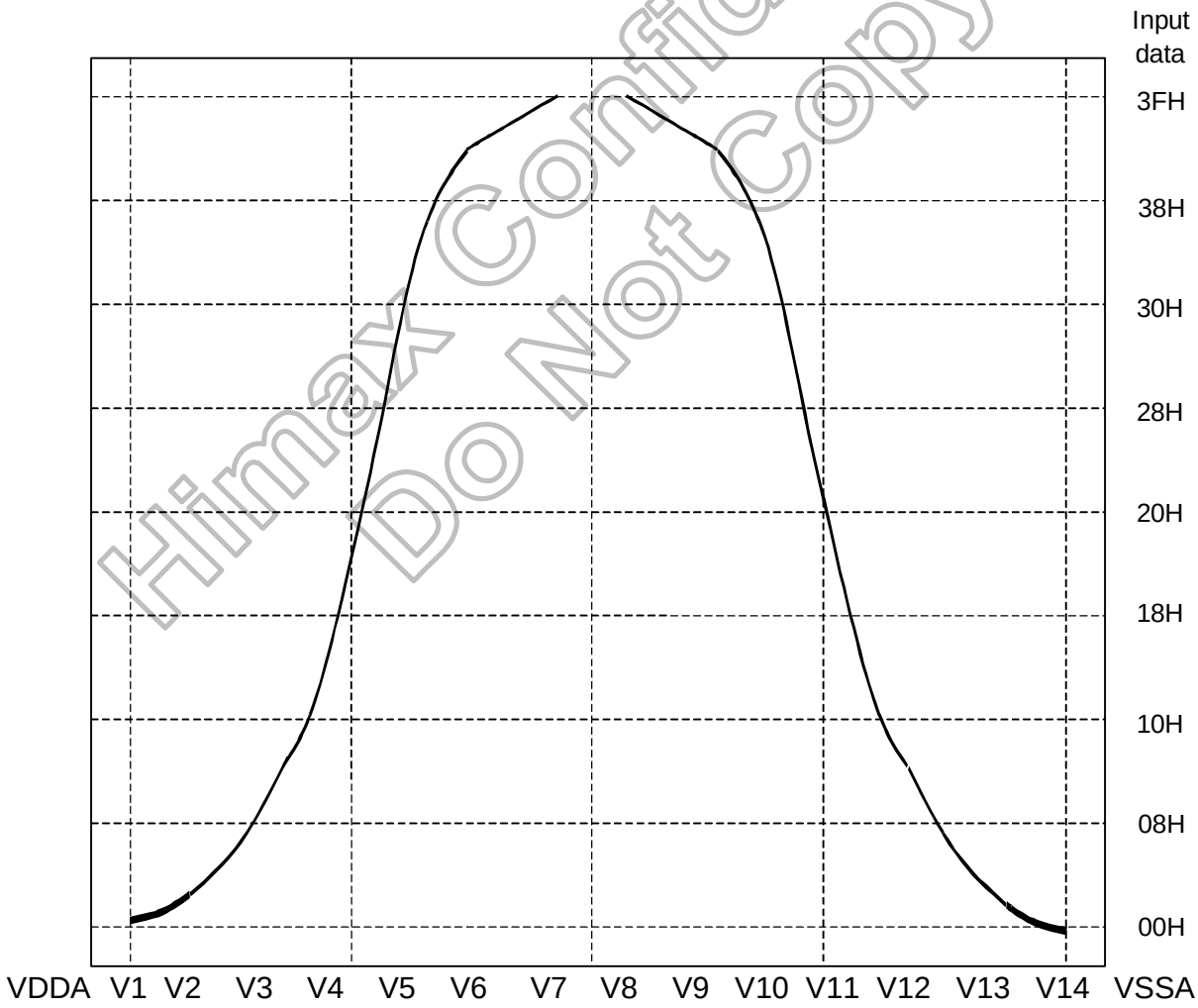

Figure 6.1: Gamma Correction Characteristic Curve

Himax Confidential
Do Not Copy

REV=0 data not inverted, for normally white panel (Default)
VSET=0, 10 gamma voltage input, V2, V6, V9, V13 is disable (Default)
Gamma correction resistor ratio: (1 unit=125ohm)

V1, V14 → V4, V11 ←

Name	Resistor	Name	Resistor
R0	9.6	R32	0.8
R1	8.4	R33	0.8
R2	7.6	R34	0.8
R3	6.4	R35	0.8
R4	5.2	R36	0.8
R5	4.4	R37	0.8
R6	3.6	R38	0.8
R7	2.8	R39	0.8
R8	2.4	R40	0.8
R9	2.4	R41	0.8
R10	2	R42	0.8
R11	2	R43	0.8
R12	1.6	R44	0.8
R13	1.6	R45	0.8
R14	1.6	R46	0.8
R15	1.2	R47	0.8
R16	1.2	R48	0.8
R17	1.2	R49	0.8
R18	1.2	R50	0.8
R19	1.2	R51	0.8
R20	1.2	R52	0.8
R21	1.2	R53	0.8
R22	0.8	R54	1.2
R23	0.8	R55	1.2
R24	0.8	R56	1.2
R25	0.8	R57	1.6
R26	0.8	R58	1.6
R27	0.8	R59	2
R28	0.8	R60	2.4
R29	0.8	R61	4
R30	0.8	R62	32.8
R31	0.8		

V3, V12 → V5, V10 ←

V7, V8 ←

V4, V11 →

Himax Confidential
Do Not Copy

This information contained herein is the exclusive property of Himax and shall not be distributed, reproduced, or disclosed in whole or in part without prior written permission of Himax.

REV=0 data not inverted, for normally white panel (Default)
VSET=1, 14 gamma voltage input
Gamma correction resistor ratio: (1 unit=125ohm)

	Name	Resistor	Name	Resistor	
V1, V14	R0	9.6	R32	0.8	V4, V11
V2, V13	R1	8.4	R33	0.8	
	R2	7.6	R34	0.8	
	R3	6.4	R35	0.8	
	R4	5.2	R36	0.8	
	R5	4.4	R37	0.8	
	R6	3.6	R38	0.8	
	R7	2.8	R39	0.8	
	R8	2.4	R40	0.8	
	R9	2.4	R41	0.8	
	R10	2	R42	0.8	
	R11	2	R43	0.8	
	R12	1.6	R44	0.8	
	R13	1.6	R45	0.8	
	R14	1.6	R46	0.8	
	R15	1.2	R47	0.8	
V3, V12	R16	1.2	R48	0.8	V5, V10
	R17	1.2	R49	0.8	
	R18	1.2	R50	0.8	
	R19	1.2	R51	0.8	
	R20	1.2	R52	0.8	
	R21	1.2	R53	0.8	
	R22	0.8	R54	1.2	
	R23	0.8	R55	1.2	
	R24	0.8	R56	1.2	
	R25	0.8	R57	1.6	
	R26	0.8	R58	1.6	
	R27	0.8	R59	2	
	R28	0.8	R60	2.4	
	R29	0.8	R61	4	V6, V9
	R30	0.8	R62	32.8	V7, V8
V4, V11	R31	0.8			

Himax Confidential
Do Not Copy

This information contained herein is the exclusive property of Himax and shall not be distributed, reproduced, or disclosed in whole or in part without prior written permission of Himax.

Output Voltages vs. Source Input Data
REV=0 data not inverted, for normally white panel (Default)
VSET=0, 10 gamma voltage input, V2, V6, V9, V13 is disable (Default)

Data	Positive polarity Output Voltage	Negative polarity Output Voltage
00H	V1	V14
01H	V3 + (V1 – V3)X 53.2 / 62.8	V14 + (V12 – V14)X 9.6 / 62.8
02H	V3 + (V1 – V3)X 44.8 / 62.8	V14 + (V12 – V14)X 18 / 62.8
03H	V3 + (V1 – V3)X 37.2 / 62.8	V14 + (V12 – V14)X 25.6 / 62.8
04H	V3 + (V1 – V3)X 30.8 / 62.8	V14 + (V12 – V14)X 32 / 62.8
05H	V3 + (V1 – V3)X 25.6 / 62.8	V14 + (V12 – V14)X 37.2 / 62.8
06H	V3 + (V1 – V3)X 21.2 / 62.8	V14 + (V12 – V14)X 41.6 / 62.8
07H	V3 + (V1 – V3)X 17.6 / 62.8	V14 + (V12 – V14)X 45.2 / 62.8
08H	V3 + (V1 – V3)X 14.8 / 62.8	V14 + (V12 – V14)X 48 / 62.8
09H	V3 + (V1 – V3)X 12.4 / 62.8	V14 + (V12 – V14)X 50.4 / 62.8
0AH	V3 + (V1 – V3)X 10 / 62.8	V14 + (V12 – V14)X 52.8 / 62.8
0BH	V3 + (V1 – V3)X 8 / 62.8	V14 + (V12 – V14)X 54.8 / 62.8
0CH	V3 + (V1 – V3)X 6 / 62.8	V14 + (V12 – V14)X 56.8 / 62.8
0DH	V3 + (V1 – V3)X 4.4 / 62.8	V14 + (V12 – V14)X 58.4 / 62.8
0EH	V3 + (V1 – V3)X 2.8 / 62.8	V14 + (V12 – V14)X 60 / 62.8
0FH	V3 + (V1 – V3)X 1.2 / 62.8	V14 + (V12 – V14)X 61.6 / 62.8
10H	V3	V12
11H	V4 + (V3 – V4) X 14 / 15.2	V12 + (V11 – V12)X 1.2 / 15.2
12H	V4 + (V3 – V4) X 12.8 / 15.2	V12 + (V11 – V12)X 2.4 / 15.2
13H	V4 + (V3 – V4) X 11.6 / 15.2	V12 + (V11 – V12)X 3.6 / 15.2
14H	V4 + (V3 – V4) X 10.4 / 15.2	V12 + (V11 – V12)X 4.8 / 15.2
15H	V4 + (V3 – V4) X 9.2 / 15.2	V12 + (V11 – V12)X 6 / 15.2
16H	V4 + (V3 – V4) X 8 / 15.2	V12 + (V11 – V12)X 7.2 / 15.2
17H	V4 + (V3 – V4) X 7.2 / 15.2	V12 + (V11 – V12)X 8 / 15.2
18H	V4 + (V3 – V4) X 6.4 / 15.2	V12 + (V11 – V12)X 8.8 / 15.2
19H	V4 + (V3 – V4) X 5.6 / 15.2	V12 + (V11 – V12)X 9.6 / 15.2
1AH	V4 + (V3 – V4) X 4.8 / 15.2	V12 + (V11 – V12)X 10.4 / 15.2
1BH	V4 + (V3 – V4) X 4 / 15.2	V12 + (V11 – V12)X 11.2 / 15.2
1CH	V4 + (V3 – V4) X 3.2 / 15.2	V12 + (V11 – V12)X 12 / 15.2
1DH	V4 + (V3 – V4) X 2.4 / 15.2	V12 + (V11 – V12)X 12.8 / 15.2
1EH	V4 + (V3 – V4) X 1.6 / 15.2	V12 + (V11 – V12)X 13.6 / 15.2
1FH	V4 + (V3 – V4) X 0.8 / 15.2	V12 + (V11 – V12)X 14.4 / 15.2

Himax Confidential
Do Not Copy

This information contained herein is the exclusive property of Himax and shall not be distributed, reproduced, or disclosed in whole or in part without prior written permission of Himax.

Output Voltages vs. Source Input Data (continued):
REV=0 data not inverted, for normally white panel (Default)
VSET=0, 10 gamma voltage input, V2, V6, V9, V13 is disable (Default)

Data	Positive polarity Output Voltage	Negative polarity Output Voltage
20H	V4	V11
21H	V5 + (V4 – V5) X 12 / 12.8	V11 + (V10 – V11) X 0.8 / 12.8
22H	V5 + (V4 – V5) X 11.2 / 12.8	V11 + (V10 – V11) X 1.6 / 12.8
23H	V5 + (V4 – V5) X 10.4 / 12.8	V11 + (V10 – V11) X 2.4 / 12.8
24H	V5 + (V4 – V5) X 9.6 / 12.8	V11 + (V10 – V11) X 3.2 / 12.8
25H	V5 + (V4 – V5) X 8.8 / 12.8	V11 + (V10 – V11) X 4 / 12.8
26H	V5 + (V4 – V5) X 8 / 12.8	V11 + (V10 – V11) X 4.8 / 12.8
27H	V5 + (V4 – V5) X 7.2 / 12.8	V11 + (V10 – V11) X 5.6 / 12.8
28H	V5 + (V4 – V5) X 6.4 / 12.8	V11 + (V10 – V11) X 6.4 / 12.8
29H	V5 + (V4 – V5) X 5.6 / 12.8	V11 + (V10 – V11) X 7.2 / 12.8
2AH	V5 + (V4 – V5) X 4.8 / 12.8	V11 + (V10 – V11) X 8 / 12.8
2BH	V5 + (V4 – V5) X 4 / 12.8	V11 + (V10 – V11) X 8.8 / 12.8
2CH	V5 + (V4 – V5) X 3.2 / 12.8	V11 + (V10 – V11)X 9.6 / 12.8
2DH	V5 + (V4 – V5) X 2.4 / 12.8	V11 + (V10 – V11)X 10.4 / 12.8
2EH	V5 + (V4 – V5) X 1.6 / 12.8	V11 + (V10 – V11) X 11.2 / 12.8
2FH	V5 + (V4 – V5) X 0.8 / 12.8	V11 + (V10 – V11) X 12 / 12.8
30H	V5	V10
31H	V7 + (V5 – V7) X 52 / 52.8	V10 + (V8 – V10) X 0.8 / 52.8
32H	V7 + (V5 – V7) X 51.2 / 52.8	V10 + (V8 – V10) X 1.6 / 52.8
33H	V7 + (V5 – V7) X 50.4 / 52.8	V10 + (V8 – V10) X 2.4 / 52.8
34H	V7 + (V5 – V7) X 49.6 / 52.8	V10 + (V8 – V10) X 3.2 / 52.8
35H	V7 + (V5 – V7) X 48.8 / 52.8	V10 + (V8 – V10) X 4 / 52.8
36H	V7 + (V5 – V7) X 48 / 52.8	V10 + (V8 – V10) X 4.8 / 52.8
37H	V7 + (V5 – V7) X 46.8 / 52.8	V10 + (V8 – V10) X 6 / 52.8
38H	V7 + (V5 – V7) X 45.6 / 52.8	V10 + (V8 – V10) X 7.2 / 52.8
39H	V7 + (V5 – V7) X 44.4 / 52.8	V10 + (V8 – V10) X 8.4 / 52.8
3AH	V7 + (V5 – V7) X 42.8 / 52.8	V10 + (V8 – V10) X 10 / 52.8
3BH	V7 + (V5 – V7) X 41.2 / 52.8	V10 + (V8 – V10) X 11.6 / 52.8
3CH	V7 + (V5 – V7) X 39.2 / 52.8	V10 + (V8 – V10) X 13.6 / 52.8
3DH	V7 + (V5 – V7) X 36.8 / 52.8	V10 + (V8 – V10) X 16 / 52.8
3EH	V7 + (V5 – V7) X 32.8 / 52.8	V10 + (V8 – V10) X 20 / 52.8
3FH	V7	V8

Himax Confidential
Do Not Copy

This information contained herein is the exclusive property of Himax and shall not be distributed, reproduced, or disclosed in whole or in part without prior written permission of Himax.

Output Voltages vs. Source Input Data
REV=0 data not inverted, for normally white panel (Default)
VSET=1, 14 gamma voltage input

Data	Positive polarity Output Voltage	Negative polarity Output Voltage
00H	V1	V14
01H	V2	V13
02H	V3 + (V1 – V3)X 44.8 / 53.2	V14 + (V12 – V14)X 8.4 / 53.2
03H	V3 + (V1 – V3)X 37.2 / 53.2	V14 + (V12 – V14)X 16 / 53.2
04H	V3 + (V1 – V3)X 30.8 / 53.2	V14 + (V12 – V14)X 22.4 / 53.2
05H	V3 + (V1 – V3)X 25.6 / 53.2	V14 + (V12 – V14)X 27.6 / 53.2
06H	V3 + (V1 – V3)X 21.2 / 53.2	V14 + (V12 – V14)X 32 / 53.2
07H	V3 + (V1 – V3)X 17.6 / 53.2	V14 + (V12 – V14)X 35.6 / 53.2
08H	V3 + (V1 – V3)X 14.8 / 53.2	V14 + (V12 – V14)X 38.4 / 53.2
09H	V3 + (V1 – V3)X 12.4 / 53.2	V14 + (V12 – V14)X 40.8 / 53.2
0AH	V3 + (V1 – V3)X 10 / 53.2	V14 + (V12 – V14)X 43.2 / 53.2
0BH	V3 + (V1 – V3)X 8 / 53.2	V14 + (V12 – V14)X 45.2 / 53.2
0CH	V3 + (V1 – V3)X 6 / 53.2	V14 + (V12 – V14)X 47.2 / 53.2
0DH	V3 + (V1 – V3)X 4.4 / 53.2	V14 + (V12 – V14)X 48.8 / 53.2
0EH	V3 + (V1 – V3)X 2.8 / 53.2	V14 + (V12 – V14)X 50.4 / 53.2
0FH	V3 + (V1 – V3)X 1.2 / 53.2	V14 + (V12 – V14)X 52 / 53.2
10H	V3	V12
11H	V4 + (V3 – V4) X 14 / 15.2	V12 + (V11 – V12)X 1.2 / 15.2
12H	V4 + (V3 – V4) X 12.8 / 15.2	V12 + (V11 – V12)X 2.4 / 15.2
13H	V4 + (V3 – V4) X 11.6 / 15.2	V12 + (V11 – V12)X 3.6 / 15.2
14H	V4 + (V3 – V4) X 10.4 / 15.2	V12 + (V11 – V12)X 4.8 / 15.2
15H	V4 + (V3 – V4) X 9.2 / 15.2	V12 + (V11 – V12)X 6 / 15.2
16H	V4 + (V3 – V4) X 8 / 15.2	V12 + (V11 – V12)X 7.2 / 15.2
17H	V4 + (V3 – V4) X 7.2 / 15.2	V12 + (V11 – V12)X 8 / 15.2
18H	V4 + (V3 – V4) X 6.4 / 15.2	V12 + (V11 – V12)X 8.8 / 15.2
19H	V4 + (V3 – V4) X 5.6 / 15.2	V12 + (V11 – V12)X 9.6 / 15.2
1AH	V4 + (V3 – V4) X 4.8 / 15.2	V12 + (V11 – V12)X 10.4 / 15.2
1BH	V4 + (V3 – V4) X 4 / 15.2	V12 + (V11 – V12)X 11.2 / 15.2
1CH	V4 + (V3 – V4) X 3.2 / 15.2	V12 + (V11 – V12)X 12 / 15.2
1DH	V4 + (V3 – V4) X 2.4 / 15.2	V12 + (V11 – V12)X 12.8 / 15.2
1EH	V4 + (V3 – V4) X 1.6 / 15.2	V12 + (V11 – V12)X 13.6 / 15.2
1FH	V4 + (V3 – V4) X 0.8 / 15.2	V12 + (V11 – V12)X 14.4 / 15.2

Himax Confidential
Do Not Copy

This information contained herein is the exclusive property of Himax and shall not be distributed, reproduced, or disclosed in whole or in part without prior written permission of Himax.

Output Voltages vs. Source Input Data (continued):
REV=0 data not inverted, for normally white panel (Default)
VSET=1, 14 gamma voltage input

Data	Positive polarity Output Voltage	Negative polarity Output Voltage
20H	V4	V11
21H	V5 + (V4 – V5) X 12 / 12.8	V11 + (V10 – V11) X 0.8 / 12.8
22H	V5 + (V4 – V5) X 11.2 / 12.8	V11 + (V10 – V11) X 1.6 / 12.8
23H	V5 + (V4 – V5) X 10.4 / 12.8	V11 + (V10 – V11) X 2.4 / 12.8
24H	V5 + (V4 – V5) X 9.6 / 12.8	V11 + (V10 – V11) X 3.2 / 12.8
25H	V5 + (V4 – V5) X 8.8 / 12.8	V11 + (V10 – V11) X 4 / 12.8
26H	V5 + (V4 – V5) X 8 / 12.8	V11 + (V10 – V11) X 4.8 / 12.8
27H	V5 + (V4 – V5) X 7.2 / 12.8	V11 + (V10 – V11) X 5.6 / 12.8
28H	V5 + (V4 – V5) X 6.4 / 12.8	V11 + (V10 – V11) X 6.4 / 12.8
29H	V5 + (V4 – V5) X 5.6 / 12.8	V11 + (V10 – V11) X 7.2 / 12.8
2AH	V5 + (V4 – V5) X 4.8 / 12.8	V11 + (V10 – V11) X 8 / 12.8
2BH	V5 + (V4 – V5) X 4 / 12.8	V11 + (V10 – V11) X 8.8 / 12.8
2CH	V5 + (V4 – V5) X 3.2 / 12.8	V11 + (V10 – V11)X 9.6 / 12.8
2DH	V5 + (V4 – V5) X 2.4 / 12.8	V11 + (V10 – V11)X 10.4 / 12.8
2EH	V5 + (V4 – V5) X 1.6 / 12.8	V11 + (V10 – V11) X 11.2 / 12.8
2FH	V5 + (V4 – V5) X 0.8 / 12.8	V11 + (V10 – V11) X 12 / 12.8
30H	V5	V10
31H	V7 + (V5 – V7) X 19.2 / 20	V10 + (V8 – V10) X 0.8 / 20
32H	V7 + (V5 – V7) X 18.4 / 20	V10 + (V8 – V10) X 1.6 / 20
33H	V7 + (V5 – V7) X 17.6 / 20	V10 + (V8 – V10) X 2.4 / 20
34H	V7 + (V5 – V7) X 16.8 / 20	V10 + (V8 – V10) X 3.2 / 20
35H	V7 + (V5 – V7) X 16 / 20	V10 + (V8 – V10) X 4 / 20
36H	V7 + (V5 – V7) X 15.2 / 20	V10 + (V8 – V10) X 4.8 / 20
37H	V7 + (V5 – V7) X 14 / 20	V10 + (V8 – V10) X 6 / 20
38H	V7 + (V5 – V7) X 12.8 / 20	V10 + (V8 – V10) X 7.2 / 20
39H	V7 + (V5 – V7) X 11.6 / 20	V10 + (V8 – V10) X 8.4 / 20
3AH	V7 + (V5 – V7) X 10 / 20	V10 + (V8 – V10) X 10 / 20
3BH	V7 + (V5 – V7) X 8.4 / 20	V10 + (V8 – V10) X 11.6 / 20
3CH	V7 + (V5 – V7) X 6.4 / 20	V10 + (V8 – V10) X 13.6 / 20
3DH	V7 + (V5 – V7) X 4 / 20	V10 + (V8 – V10) X 16 / 20
3EH	V6	V9
3FH	V7	V8

Himax Confidential
Do Not Copy

This information contained herein is the exclusive property of Himax and shall not be distributed, reproduced, or disclosed in whole or in part without prior written permission of Himax.

REV=1 data inverted, for normally black panel
VSET=0, 10 gamma voltage input, V2, V6, V9, V13 is disable (Default)
Gamma correction resistor ratio: (1 unit=125ohm)

Positive gamma

	Name	Resistor	Name	Resistor	
V1	R0	6	R32	1.2	V4
	R1	8	R33	0.8	
	R2	6	R34	0.8	
	R3	5.2	R35	0.8	
	R4	4	R36	0.8	
	R5	3.2	R37	0.8	
	R6	2.8	R38	0.8	
	R7	2.4	R39	0.8	
	R8	2	R40	0.8	
	R9	2	R41	0.8	
	R10	1.6	R42	0.8	
	R11	1.6	R43	0.8	
	R12	1.6	R44	0.8	
	R13	1.6	R45	0.8	
	R14	1.6	R46	0.8	
	R15	1.6	R47	0.8	
V3	R16	1.6	R48	0.8	V5
	R17	1.6	R49	0.8	
	R18	1.6	R50	0.8	
	R19	1.2	R51	0.8	
	R20	1.2	R52	0.8	
	R21	1.2	R53	0.8	
	R22	1.2	R54	0.8	
	R23	1.2	R55	0.8	
	R24	0.8	R56	0.8	
	R25	0.8	R57	1.2	
	R26	0.8	R58	2.8	
	R27	0.8	R59	3.6	
	R28	0.8	R60	6	
	R29	0.8	R61	7.6	
	R30	0.8	R62	12.8	V7
V4	R31	1.2			

Himax Confidential
Do Not Copy

This information contained herein is the exclusive property of Himax and shall not be distributed, reproduced, or disclosed in whole or in part without prior written permission of Himax.

REV=1 data inverted, for normally black panel
VSET=0, 10 gamma voltage input, V2, V6, V9, V13 is disable (Default)
Negative gamma

Name	Resistor	Name	Resistor
R0	8	R32	0.8
R1	11.2	R33	0.8
R2	8	R34	0.8
R3	6.8	R35	0.8
R4	5.2	R36	0.8
R5	4.8	R37	0.8
R6	4	R38	0.8
R7	3.2	R39	0.8
R8	2.8	R40	0.8
R9	2.8	R41	0.8
R10	2.4	R42	0.8
R11	2	R43	0.8
R12	2	R44	0.8
R13	2	R45	0.8
R14	1.6	R46	0.8
R15	1.2	R47	0.8
R16	1.2	R48	0.8
R17	0.8	R49	0.8
R18	0.8	R50	0.8
R19	0.8	R51	1.2
R20	0.6	R52	1.2
R21	0.4	R53	1.2
R22	0.4	R54	1.6
R23	0.4	R55	1.6
R24	0.4	R56	2
R25	0.4	R57	2.4
R26	0.4	R58	2.4
R27	0.4	R59	3.2
R28	0.4	R60	3.2
R29	0.4	R61	6
R30	0.4	R62	5.6
R31	0.6		

V14 → R0
V11 → R32
V12 → R15
V10 → R47
V11 → R31
V8 → R62

Himax Confidential
Do Not Copy

This information contained herein is the exclusive property of Himax and shall not be distributed, reproduced, or disclosed in whole or in part without prior written permission of Himax.

REV=1 data inverted, for normally black panel
VSET=1, 14 gamma voltage input
Positive gamma

	Name	Resistor	Name	Resistor	
V1	R0	6	R32	1.2	V4
V2	R1	8	R33	0.8	
	R2	6	R34	0.8	
	R3	5.2	R35	0.8	
	R4	4	R36	0.8	
	R5	3.2	R37	0.8	
	R6	2.8	R38	0.8	
	R7	2.4	R39	0.8	
	R8	2	R40	0.8	
	R9	2	R41	0.8	
	R10	1.6	R42	0.8	
	R11	1.6	R43	0.8	
	R12	1.6	R44	0.8	
	R13	1.6	R45	0.8	
	R14	1.6	R46	0.8	
	R15	1.6	R47	0.8	
V3	R16	1.6	R48	0.8	V5
	R17	1.6	R49	0.8	
	R18	1.6	R50	0.8	
	R19	1.2	R51	0.8	
	R20	1.2	R52	0.8	
	R21	1.2	R53	0.8	
	R22	1.2	R54	0.8	
	R23	1.2	R55	0.8	
	R24	0.8	R56	0.8	
	R25	0.8	R57	1.2	
	R26	0.8	R58	2.8	
	R27	0.8	R59	3.6	
	R28	0.8	R60	6	
	R29	0.8	R61	7.6	V6
	R30	0.8	R62	12.8	V7
V4	R31	1.2			

Himax Confidential
Do Not Copy

This information contained herein is the exclusive property of Himax and shall not be distributed, reproduced, or disclosed in whole or in part without prior written permission of Himax.

REV=1 data inverted, for normally black panel
VSET=1, 14 gamma voltage input
Negative gamma

Name	Resistor	Name	Resistor
R0	8	R32	0.8
R1	11.2	R33	0.8
R2	8	R34	0.8
R3	6.8	R35	0.8
R4	5.2	R36	0.8
R5	4.8	R37	0.8
R6	4	R38	0.8
R7	3.2	R39	0.8
R8	2.8	R40	0.8
R9	2.8	R41	0.8
R10	2.4	R42	0.8
R11	2	R43	0.8
R12	2	R44	0.8
R13	2	R45	0.8
R14	1.6	R46	0.8
R15	1.2	R47	0.8
R16	1.2	R48	0.8
R17	0.8	R49	0.8
R18	0.8	R50	0.8
R19	0.8	R51	1.2
R20	0.6	R52	1.2
R21	0.4	R53	1.2
R22	0.4	R54	1.6
R23	0.4	R55	1.6
R24	0.4	R56	2
R25	0.4	R57	2.4
R26	0.4	R58	2.4
R27	0.4	R59	3.2
R28	0.4	R60	3.2
R29	0.4	R61	6
R30	0.4	R62	5.6
R31	0.6		

V14, V13, V12, V11 (left side)
V11, V10, V9, V8 (right side)

Himax Confidential
Do Not Copy

This information contained herein is the exclusive property of Himax and shall not be distributed, reproduced, or disclosed in whole or in part without prior written permission of Himax.

Output Voltages vs. Source Input Data
REV=1 data inverted, for normally black panel
VSET=0, 10 gamma voltage input, V2, V6, V9, V13 is disable (Default)

Data	Positive polarity Output Voltage	Negative polarity Output Voltage
00H	V1	V14
01H	V3 + (V1 – V3)X 45.2 / 51.2	V14 + (V12 – V14)X 8 / 68
02H	V3 + (V1 – V3)X 37.2 / 51.2	V14 + (V12 – V14)X 19.2 / 68
03H	V3 + (V1 – V3)X 31.2 / 51.2	V14 + (V12 – V14)X 27.2 / 68
04H	V3 + (V1 – V3)X 26 / 51.2	V14 + (V12 – V14)X 34 / 68
05H	V3 + (V1 – V3)X 22 / 51.2	V14 + (V12 – V14)X 39.2 / 68
06H	V3 + (V1 – V3)X 18.8 / 51.2	V14 + (V12 – V14)X 44 / 68
07H	V3 + (V1 – V3)X 16 / 51.2	V14 + (V12 – V14)X 48 / 68
08H	V3 + (V1 – V3)X 13.6 / 51.2	V14 + (V12 – V14)X 51.2 / 68
09H	V3 + (V1 – V3)X 11.6 / 51.2	V14 + (V12 – V14)X 54 / 68
0AH	V3 + (V1 – V3)X 9.6 / 51.2	V14 + (V12 – V14)X 56.8 / 68
0BH	V3 + (V1 – V3)X 8 / 51.2	V14 + (V12 – V14)X 59.2 / 68
0CH	V3 + (V1 – V3)X 6.4 / 51.2	V14 + (V12 – V14)X 61.2 / 68
0DH	V3 + (V1 – V3)X 4.8 / 51.2	V14 + (V12 – V14)X 63.2 / 68
0EH	V3 + (V1 – V3)X 3.2 / 51.2	V14 + (V12 – V14)X 65.2 / 68
0FH	V3 + (V1 – V3)X 1.6 / 51.2	V14 + (V12 – V14)X 66.8 / 68
10H	V3	V12
11H	V4 + (V3 – V4) X 16 / 17.6	V12 + (V11 – V12)X 1.2 / 8.8
12H	V4 + (V3 – V4) X 14.4 / 17.6	V12 + (V11 – V12)X 2 / 8.8
13H	V4 + (V3 – V4) X 12.8 / 17.6	V12 + (V11 – V12)X 2.8 / 8.8
14H	V4 + (V3 – V4) X 11.6 / 17.6	V12 + (V11 – V12)X 3.6 / 8.8
15H	V4 + (V3 – V4) X 10.4 / 17.6	V12 + (V11 – V12)X 4.2 / 8.8
16H	V4 + (V3 – V4) X 9.2 / 17.6	V12 + (V11 – V12)X 4.6 / 8.8
17H	V4 + (V3 – V4) X 8 / 17.6	V12 + (V11 – V12)X 5 / 8.8
18H	V4 + (V3 – V4) X 6.8 / 17.6	V12 + (V11 – V12)X 5.4 / 8.8
19H	V4 + (V3 – V4) X 6 / 17.6	V12 + (V11 – V12)X 5.8 / 8.8
1AH	V4 + (V3 – V4) X 5.2 / 17.6	V12 + (V11 – V12)X 6.2 / 8.8
1BH	V4 + (V3 – V4) X 4.4 / 17.6	V12 + (V11 – V12)X 6.6 / 8.8
1CH	V4 + (V3 – V4) X 3.6 / 17.6	V12 + (V11 – V12)X 7 / 8.8
1DH	V4 + (V3 – V4) X 2.8 / 17.6	V12 + (V11 – V12)X 7.4 / 8.8
1EH	V4 + (V3 – V4) X 2 / 17.6	V12 + (V11 – V12)X 7.8 / 8.8
1FH	V4 + (V3 – V4) X 1.2 / 17.6	V12 + (V11 – V12)X 8.2 / 8.8

Himax Confidential
Do Not Copy

This information contained herein is the exclusive property of Himax and shall not be distributed, reproduced, or disclosed in whole or in part without prior written permission of Himax.

Output Voltages vs. Source Input Data (continued):
REV=1 data inverted, for normally black panel
VSET=0, 10 gamma voltage input, V2, V6, V9, V13 is disable (Default)

Data	Positive polarity Output Voltage	Negative polarity Output Voltage
20H	V4	V11
21H	V5 + (V4 – V5) X 12 / 13.2	V11 + (V10 – V11) X 0.8 / 12.8
22H	V5 + (V4 – V5) X 11.2 / 13.2	V11 + (V10 – V11) X 1.6 / 12.8
23H	V5 + (V4 – V5) X 10.4 / 13.2	V11 + (V10 – V11) X 2.4 / 12.8
24H	V5 + (V4 – V5) X 9.6 / 13.2	V11 + (V10 – V11) X 3.2 / 12.8
25H	V5 + (V4 – V5) X 8.8 / 13.2	V11 + (V10 – V11) X 4 / 12.8
26H	V5 + (V4 – V5) X 8 / 13.2	V11 + (V10 – V11) X 4.8 / 12.8
27H	V5 + (V4 – V5) X 7.2 / 13.2	V11 + (V10 – V11) X 5.6 / 12.8
28H	V5 + (V4 – V5) X 6.4 / 13.2	V11 + (V10 – V11) X 6.4 / 12.8
29H	V5 + (V4 – V5) X 5.6 / 13.2	V11 + (V10 – V11) X 7.2 / 12.8
2AH	V5 + (V4 – V5) X 4.8 / 13.2	V11 + (V10 – V11) X 8 / 12.8
2BH	V5 + (V4 – V5) X 4 / 13.2	V11 + (V10 – V11) X 8.8 / 12.8
2CH	V5 + (V4 – V5) X 3.2 / 13.2	V11 + (V10 – V11)X 9.6 / 12.8
2DH	V5 + (V4 – V5) X 2.4 / 13.2	V11 + (V10 – V11)X 10.4 / 12.8
2EH	V5 + (V4 – V5) X 1.6 / 13.2	V11 + (V10 – V11) X 11.2 / 12.8
2FH	V5 + (V4 – V5) X 0.8 / 13.2	V11 + (V10 – V11) X 12 / 12.8
30H	V5	V10
31H	V7 + (V5 – V7) X 40.4 / 41.2	V10 + (V8 – V10) X 0.8 / 34
32H	V7 + (V5 – V7) X 39.6 / 41.2	V10 + (V8 – V10) X 1.6 / 34
33H	V7 + (V5 – V7) X 38.8 / 41.2	V10 + (V8 – V10) X 2.4 / 34
34H	V7 + (V5 – V7) X 38 / 41.2	V10 + (V8 – V10) X 3.6 / 34
35H	V7 + (V5 – V7) X 37.2 / 41.2	V10 + (V8 – V10) X 4.8 / 34
36H	V7 + (V5 – V7) X 36.4 / 41.2	V10 + (V8 – V10) X 6 / 34
37H	V7 + (V5 – V7) X 35.6 / 41.2	V10 + (V8 – V10) X 7.6 / 34
38H	V7 + (V5 – V7) X 34.8 / 41.2	V10 + (V8 – V10) X 9.2 / 34
39H	V7 + (V5 – V7) X 34 / 41.2	V10 + (V8 – V10) X 11.2 / 34
3AH	V7 + (V5 – V7) X 32.8 / 41.2	V10 + (V8 – V10) X 13.6 / 34
3BH	V7 + (V5 – V7) X 30 / 41.2	V10 + (V8 – V10) X 16 / 34
3CH	V7 + (V5 – V7) X 26.4 / 41.2	V10 + (V8 – V10) X 19.2 / 34
3DH	V7 + (V5 – V7) X 20.4 / 41.2	V10 + (V8 – V10) X 22.4 / 34
3EH	V7 + (V5 – V7) X 12.8 / 41.2	V10 + (V8 – V10) X 28.4 / 34
3FH	V7	V8

Himax Confidential
Do Not Copy

This information contained herein is the exclusive property of Himax and shall not be distributed, reproduced, or disclosed in whole or in part without prior written permission of Himax.

Output Voltages vs. Source Input Data
REV=1 data inverted, for normally black panel
VSET=1, 14 gamma voltage input

Data	Positive polarity Output Voltage	Negative polarity Output Voltage
00H	V1	V14
01H	V2	V13
02H	V3 + (V1 – V3)X 37.2 / 51.2	V14 + (V12 – V14)X 11.2 / 60
03H	V3 + (V1 – V3)X 31.2 / 51.2	V14 + (V12 – V14)X 19.2 / 60
04H	V3 + (V1 – V3)X 26 / 51.2	V14 + (V12 – V14)X 26 / 60
05H	V3 + (V1 – V3)X 22 / 51.2	V14 + (V12 – V14)X 31.2 / 60
06H	V3 + (V1 – V3)X 18.8 / 51.2	V14 + (V12 – V14)X 36 / 60
07H	V3 + (V1 – V3)X 16 / 51.2	V14 + (V12 – V14)X 40 / 60
08H	V3 + (V1 – V3)X 13.6 / 51.2	V14 + (V12 – V14)X 43.2 / 60
09H	V3 + (V1 – V3)X 11.6 / 51.2	V14 + (V12 – V14)X 46 / 60
0AH	V3 + (V1 – V3)X 9.6 / 51.2	V14 + (V12 – V14)X 48.8 / 60
0BH	V3 + (V1 – V3)X 8 / 51.2	V14 + (V12 – V14)X 51.2 / 60
0CH	V3 + (V1 – V3)X 6.4 / 51.2	V14 + (V12 – V14)X 53.2 / 60
0DH	V3 + (V1 – V3)X 4.8 / 51.2	V14 + (V12 – V14)X 55.2 / 60
0EH	V3 + (V1 – V3)X 3.2 / 51.2	V14 + (V12 – V14)X 57.2 / 60
0FH	V3 + (V1 – V3)X 1.6 / 51.2	V14 + (V12 – V14)X 58.8 / 60
10H	V3	V12
11H	V4 + (V3 – V4) X 16 / 17.6	V12 + (V11 – V12)X 1.2 / 8.8
12H	V4 + (V3 – V4) X 14.4 / 17.6	V12 + (V11 – V12)X 2 / 8.8
13H	V4 + (V3 – V4) X 12.8 / 17.6	V12 + (V11 – V12)X 2.8 / 8.8
14H	V4 + (V3 – V4) X 11.6 / 17.6	V12 + (V11 – V12)X 3.6 / 8.8
15H	V4 + (V3 – V4) X 10.4 / 17.6	V12 + (V11 – V12)X 4.2 / 8.8
16H	V4 + (V3 – V4) X 9.2 / 17.6	V12 + (V11 – V12)X 4.6 / 8.8
17H	V4 + (V3 – V4) X 8 / 17.6	V12 + (V11 – V12)X 5 / 8.8
18H	V4 + (V3 – V4) X 6.8 / 17.6	V12 + (V11 – V12)X 5.4 / 8.8
19H	V4 + (V3 – V4) X 6 / 17.6	V12 + (V11 – V12)X 5.8 / 8.8
1AH	V4 + (V3 – V4) X 5.2 / 17.6	V12 + (V11 – V12)X 6.2 / 8.8
1BH	V4 + (V3 – V4) X 4.4 / 17.6	V12 + (V11 – V12)X 6.6 / 8.8
1CH	V4 + (V3 – V4) X 3.6 / 17.6	V12 + (V11 – V12)X 7 / 8.8
1DH	V4 + (V3 – V4) X 2.8 / 17.6	V12 + (V11 – V12)X 7.4 / 8.8
1EH	V4 + (V3 – V4) X 2 / 17.6	V12 + (V11 – V12)X 7.8 / 8.8
1FH	V4 + (V3 – V4) X 1.2 / 17.6	V12 + (V11 – V12)X 8.2 / 8.8

Himax Confidential
Do Not Copy

This information contained herein is the exclusive property of Himax and shall not be distributed, reproduced, or disclosed in whole or in part without prior written permission of Himax.

Output Voltages vs. Source Input Data (continued):
REV=1 data inverted, for normally black panel
VSET=1, 14 gamma voltage input

Data	Positive polarity Output Voltage	Negative polarity Output Voltage
20H	V4	V11
21H	V5 + (V4 – V5) X 12 / 13.2	V11 + (V10 – V11) X 0.8 / 12.8
22H	V5 + (V4 – V5) X 11.2 / 13.2	V11 + (V10 – V11) X 1.6 / 12.8
23H	V5 + (V4 – V5) X 10.4 / 13.2	V11 + (V10 – V11) X 2.4 / 12.8
24H	V5 + (V4 – V5) X 9.6 / 13.2	V11 + (V10 – V11) X 3.2 / 12.8
25H	V5 + (V4 – V5) X 8.8 / 13.2	V11 + (V10 – V11) X 4 / 12.8
26H	V5 + (V4 – V5) X 8 / 13.2	V11 + (V10 – V11) X 4.8 / 12.8
27H	V5 + (V4 – V5) X 7.2 / 13.2	V11 + (V10 – V11) X 5.6 / 12.8
28H	V5 + (V4 – V5) X 6.4 / 13.2	V11 + (V10 – V11) X 6.4 / 12.8
29H	V5 + (V4 – V5) X 5.6 / 13.2	V11 + (V10 – V11) X 7.2 / 12.8
2AH	V5 + (V4 – V5) X 4.8 / 13.2	V11 + (V10 – V11) X 8 / 12.8
2BH	V5 + (V4 – V5) X 4 / 13.2	V11 + (V10 – V11) X 8.8 / 12.8
2CH	V5 + (V4 – V5) X 3.2 / 13.2	V11 + (V10 – V11)X 9.6 / 12.8
2DH	V5 + (V4 – V5) X 2.4 / 13.2	V11 + (V10 – V11)X 10.4 / 12.8
2EH	V5 + (V4 – V5) X 1.6 / 13.2	V11 + (V10 – V11) X 11.2 / 12.8
2FH	V5 + (V4 – V5) X 0.8 / 13.2	V11 + (V10 – V11) X 12 / 12.8
30H	V5	V10
31H	V7 + (V5 – V7) X 40.4 / 41.2	V10 + (V8 – V10) X 0.8 / 34
32H	V7 + (V5 – V7) X 39.6 / 41.2	V10 + (V8 – V10) X 1.6 / 34
33H	V7 + (V5 – V7) X 38.8 / 41.2	V10 + (V8 – V10) X 2.4 / 34
34H	V7 + (V5 – V7) X 38 / 41.2	V10 + (V8 – V10) X 3.6 / 34
35H	V7 + (V5 – V7) X 37.2 / 41.2	V10 + (V8 – V10) X 4.8 / 34
36H	V7 + (V5 – V7) X 36.4 / 41.2	V10 + (V8 – V10) X 6 / 34
37H	V7 + (V5 – V7) X 35.6 / 41.2	V10 + (V8 – V10) X 7.6 / 34
38H	V7 + (V5 – V7) X 34.8 / 41.2	V10 + (V8 – V10) X 9.2 / 34
39H	V7 + (V5 – V7) X 34 / 41.2	V10 + (V8 – V10) X 11.2 / 34
3AH	V7 + (V5 – V7) X 32.8 / 41.2	V10 + (V8 – V10) X 13.6 / 34
3BH	V7 + (V5 – V7) X 30 / 41.2	V10 + (V8 – V10) X 16 / 34
3CH	V7 + (V5 – V7) X 26.4 / 41.2	V10 + (V8 – V10) X 19.2 / 34
3DH	V7 + (V5 – V7) X 20.4 / 41.2	V10 + (V8 – V10) X 22.4 / 34
3EH	V6	V9
3FH	V7	V8

Himax Confidential
Do Not Copy

This information contained herein is the exclusive property of Himax and shall not be distributed, reproduced, or disclosed in whole or in part without prior written permission of Himax.

7. CABC (Content Adaptive Brightness Control)

HX8264-D03 supports content adaptive brightness control (CABC) function to reduce the power consumption of back light driver, depend on the image data output PWM pulse to back light driver for brightness control. It control backlight brightness intelligently by analyzing the display content which saves power, enhances contrast while maintaining vivid display quality.

The dimming algorithm enables a smooth backlight adjustment even when the content and brightness are swiftly changing.

CABC function can be configured by hardware control pin or software commends via SPI mode.

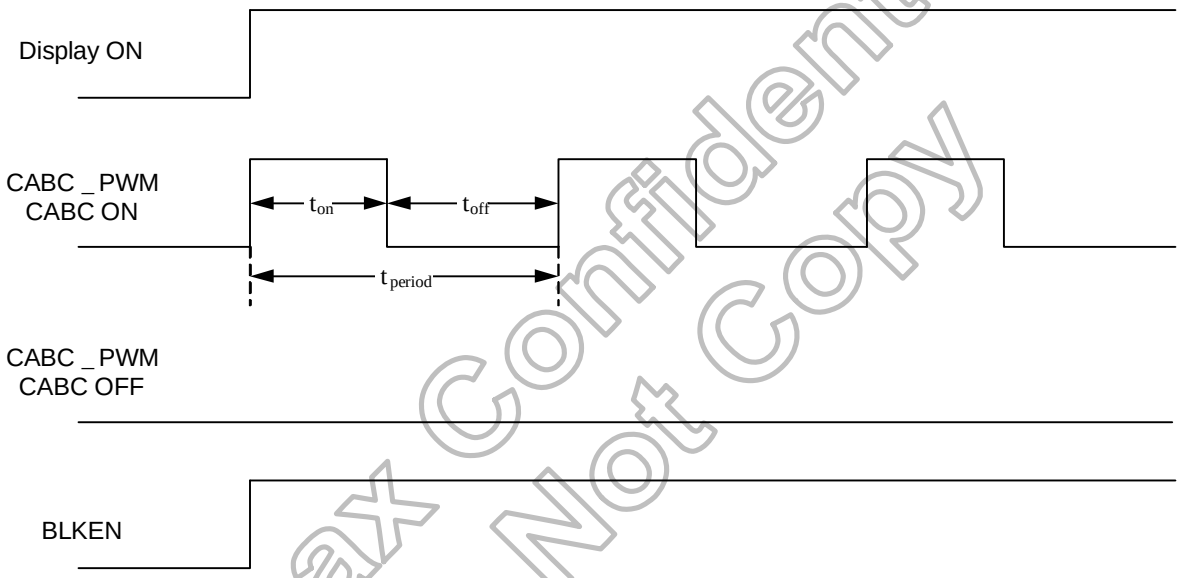

Himax Confidential
Do Not Copy

This information contained herein is the exclusive property of Himax and shall not be distributed, reproduced, or disclosed in whole or in part without prior written permission of Himax.

7.1 CABC Hardware Control

CABC_EN	DBC3	SDA/DBCM[1]	SCL/DBCM[0]	Function
0	X	X	X	CABC Disable
1	0	0	1	CABC Disable
1	0	0	0	UI mode (User Interface Image)
1	0	1	0	Moving mode (Moving Picture Image)
1	0	1	1	Still mode (Still Picture Image)
1	1	X	X	CABC software SPI control

7.2 CABC Software SPI Control

CABC Register Table

Register	Name	Default	Description	Note
R82h	CABC_CTL	0x30	[7:6]: Reserved [5:4]: CABC mode selection 00: Bypass mode 01: UI mode 10: Still mode 11: Moving mode (Default) [3:0]: Reserved	
R51h	BYPASS_DUTY	0xFF	[7:0]: CABC bypass mode duty cycle When 0x82=00h, CABC duty cycle is fixed by R51h	
R53h	CABC_FUN1	0x0C	[7:4]: Reserved [3]: ENDIM, Dimming function enable and disable 0: Disable 1: Enable (Default) [2]: BL, Back light is controlled by CABC function 0: Back light OFF 1: Back light ON (Default) [1:0]: Reserved	
R59h	DRV_FRE_A	0x00	[7:3]: Reserved [2:0]: DRV_FRE_A, parameter A of adjusting PWM period	
R5Eh	CABC_MB	0x80	[7:0]: CABC_MB, Minimum duty constraint (minimum brightness)	
R60h	DRV_FRE_B	0x04	[7:0]: DRV_FRE_B, parameter B of adjusting PWM period	
R65h	DIMT	0x21	[7:6]: Reserved [5:4]: DIM_A, total dimming time parameter A [1:0]: DIM_B, total dimming time parameter B Total dimming time = DIM_A x DIM_B (unit: frame)	
R70h	DBG_0	0x70	CABC curve user define gray level 0	
R71h	DBG_1	0xAC	CABC curve user define gray level 32	
R72h	DBG_2	0xC0	CABC curve user define gray level 64	
R73h	DBG_3	0xCD	CABC curve user define gray level 96	
R74h	DBG_4	0xD6	CABC curve user define gray level 128	
R75h	DBG_5	0xE0	CABC curve user define gray level 160	
R76h	DBG_6	0xEC	CABC curve user define gray level 192	
R77h	DBG_7	0xF8	CABC curve user define gray level 224	
R78h	DBG_8	0xFF	CABC curve user define gray level 255	

Note: (1) The un-addressed registers and reserved bit can't be written any data; otherwise the fault function is possible.
(2) All CABC parameter registers (R59h, R5Eh, R60h, R65h and R70h~R78h) access must before end of the power on sequence or enter standby mode or CABC_EN= "0".
(3) R70h~R78h default value depend on R82h[5:4] CABC mode selection.

Himax Confidential
Do Not Copy

7.3 Commend Description

R82h

No.	R/W	Address								Default setting value							
R82	R/W	A7	A6	A5	A4	A3	A2	A1	A0	D7	D6	D5	D4	D3	D2	D1	D0
	1/0	1	0	0	0	0	0	1	0	0	0	1	1	0	0	0	0

R82h [5:4]: CABC_CTL, content adaptive brightness control mode

R82h[5:4]		Function	Note
0	0	Off (Bypass CABC)	-
0	1	UI mode (user interface image)	-
1	0	Still mode (still picture image)	-
1	1	Moving mode (Moving picture image)	Default

Note: When R82h[5:4]=00, CABC function is bypassed and PWM duty is fixed by R51h.

R51h

No.	R/W	Address								Default setting value							
R51	R/W	A7	A6	A5	A4	A3	A2	A1	A0	D7	D6	D5	D4	D3	D2	D1	D0
	1/0	0	1	0	1	0	0	0	1	1	1	1	1	1	1	1	1

R51h [7:0]: Set PWM duty level when CABC Off (Bypass CABC mode)

R51h[7:0]								Function PWM duty	Note
0	0	0	0	0	0	0	0	0%	-
0	0	0	0	0	0	0	1	0.3906%	-
0	0	0	0	0	0	1	0	0.7813%	-
:	:	:	:	:	:	:	:	:	-
1	1	1	1	1	1	0	1	98.8281%	-
1	1	1	1	1	1	1	0	99.2188%	-
1	1	1	1	1	1	1	1	100%	Default

R53h

No.	R/W	Address								Default setting value							
R53	R/W	A7	A6	A5	A4	A3	A2	A1	A0	D7	D6	D5	D4	D3	D2	D1	D0
	1/0	0	1	0	1	0	0	1	1	0	0	0	0	1	1	0	0

R53h [2]: BL, Back light is controlled by CABC function

R53h[2]	Function	Note
0	Off	-
1	On	Default

R53h [3]: ENDIM, Enable/Disable Dimming

R53h[3]	Function	Note
0	Disable	-
1	Enable	Default

Himax Confidential
Do Not Copy

R59h

No.	R/W	Address								Default setting value							
R59	R/W	A7	A6	A5	A4	A3	A2	A1	A0	D7	D6	D5	D4	D3	D2	D1	D0
	1/0	0	1	0	1	1	0	0	1	0	0	0	0	0	0	0	0

R59h[2:0]: DRV_FRE_A, parameter A of adjusting PWM period

R59h[2:0]			Function	Note
0	0	0	1	Default
0	0	1	2	-
0	1	0	4	-
0	1	1	8	-
1	0	0	16	-
1	0	1	32	-
1	1	0	64	-
1	1	1	128	-

R5Eh

No.	R/W	Address								Default setting value							
R5e	R/W	A7	A6	A5	A4	A3	A2	A1	A0	D7	D6	D5	D4	D3	D2	D1	D0
	1/0	0	1	0	1	1	1	1	0	1	0	0	0	0	0	0	0

R5Eh [7:0]: CABC_MB, Minimum duty constraint (minimum brightness)

R5eh[7:0]								Function PWM duty	Note
0	0	0	0	0	0	0	0	0%	-
0	0	0	0	0	0	0	1	0.3906%	-
0	0	0	0	0	0	1	0	0.7813%	-
:	:	:	:	:	:	:	:	:	-
1	0	0	0	0	0	0	0	50%	Default
:	:	:	:	:	:	:	:	:	-
1	1	1	1	1	1	0	1	98.8281%	-
1	1	1	1	1	1	1	0	99.2188%	-
1	1	1	1	1	1	1	1	100%	-

R60h

No.	R/W	Address								Default setting value							
R60	R/W	A7	A6	A5	A4	A3	A2	A1	A0	D7	D6	D5	D4	D3	D2	D1	D0
	1/0	0	1	1	0	0	0	0	0	0	0	0	0	0	1	0	0

R60h [7:0]: DRV_FRE_B, parameter B of adjusting PWM period

R60h[7:0]								Function DRV_FRE_B	Note
0	0	0	0	0	0	0	0	0	-
0	0	0	0	0	0	0	1	1	-
0	0	0	0	0	0	1	0	2	-
0	0	0	0	0	0	1	1	3	
0	0	0	0	0	1	0	0	4	Default
:	:	:	:	:	:	:	:	:	-
1	0	0	0	0	0	0	0	128	-
:	:	:	:	:	:	:	:	:	-
1	1	1	1	1	1	1	1	255	-

Backlight PWM output period = DCLK period x (DRV_FRE_A[2:0]) x 256 x (DRV_FRE_B[7:0]+1)

Himax Confidential
Do Not Copy

R65h

No.	R/W	Address								Default setting value							
R65	R/W	A7	A6	A5	A4	A3	A2	A1	A0	D7	D6	D5	D4	D3	D2	D1	D0
	1/0	1	1	0	0	0	0	0	0	0	0	1	0	0	0	0	1

Total dimming time = DIMT_A x DIMT_B frame

R65h [5:4]: DIMT_A, total dimming time parameter A

R65h[5:4]		Function	Note
0	0	2	-
0	1	4	-
1	0	8	Default
1	1	16	-

R65h [1:0]: DIMT_B, total dimming time parameter B

R65h[1:0]		Function	Note
0	0	1	-
0	1	2	Default
1	0	3	-
1	1	4	-

Himax Confidential
Do Not Copy

This information contained herein is the exclusive property of Himax and shall not be distributed, reproduced, or disclosed in whole or in part without prior written permission of Himax.

R70h [7:0] ~ R78h [7:0]: DBG_0~DBG_8

No.	R/W	Address								Default setting value								
		A7	A6	A5	A4	A3	A2	A1	A0	D7	D6	D5	D4	D3	D2	D1	D0	Type
R70	1/0	0	1	1	1	0	0	0	0	1	1	0	0	1	0	0	0	UI
										0	0	0	1	0	0	0	0	Still
										0	1	1	1	0	0	0	0	Move
R71	1/0	0	1	1	1	0	0	0	1	1	1	0	1	0	1	1	0	UI
										0	1	1	0	0	0	0	0	Still
										1	0	1	0	1	1	0	0	Move
R72	1/0	0	1	1	1	0	0	1	0	1	1	1	0	0	0	0	0	UI
										1	0	0	1	0	0	0	0	Still
										1	1	0	0	0	0	0	0	Move
R73	1/0	0	1	1	1	0	0	1	1	1	1	1	0	1	0	0	0	UI
										1	0	1	1	1	0	1	0	Still
										1	1	0	0	1	1	0	1	Move
R74	1/0	0	1	1	1	1	0	0	0	1	1	1	1	0	0	0	0	UI
										1	1	0	0	1	1	0	1	Still
										1	1	0	1	0	1	1	0	Move
R75	1/0	0	1	1	1	1	0	0	1	1	1	1	1	0	1	0	0	UI
										1	1	0	1	1	1	0	0	Still
										1	1	1	0	0	0	0	0	Move
R76	1/0	0	1	1	1	0	1	1	0	1	1	1	1	1	0	0	0	UI
										1	1	1	0	0	1	1	0	Still
										1	1	1	0	1	1	0	0	Move
R77	1/0	0	1	1	1	0	1	1	1	1	1	1	1	1	1	0	0	UI
										1	1	1	1	0	0	1	0	Still
										1	1	1	1	1	0	0	0	Move
R78	1/0	0	1	1	1	1	0	0	0	1	1	1	1	1	1	1	1	UI
										1	1	1	1	1	1	1	1	Still
										1	1	1	1	1	1	1	1	Move

Duty cycle = (Register value / 255) x 100%
Register value = 255 x duty cycle
For example UI mode DBG0 duty cycle = 200/255 x100% = 78.43 %
If DBG0 duty cycle need 51% the register value = 255 x 0.51 = 130 = 0x82
R70h~R78h will return default value when register R82h [5:4] CABC mode selection is written.

Himax Confidential
Do Not Copy

8. 3-wire Serial Peripheral Interface (SPI)

The HX8264-D03 supports the 3-pin serial peripheral interface (SPI) to set internal register. The data is written to the register of assigned address when "End of transfer" is detected after the 17th SCL rising cycles.

Data is not accepted if there are less or more than 17 cycles for one transaction. Only when SCL is input 17 times and SCEN is in the "Low" period simultaneously, SDA is accepted.

The first bit means Read/Write command. "0" is WRITE. "1" is READ. And the next 8 bits (A7 ~ A0) specify the address of the register. And the last 8 bits are for Data setting (D7 ~D0). The address and data are transferred from the MSB to LSB sequentially. And next cycle is turn-round cycle.

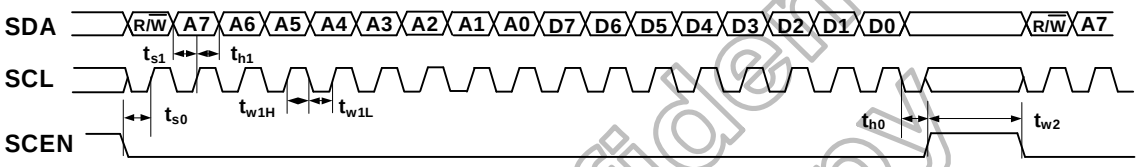

Figure 8.1: Serial Interface Signal Timing Chart

Item	Symbol	Conditions	Spec.			Unit
			Min.	Typ.	Max.	
SDA Setup Time	t_{s0}	SCEN to SCL	12	-	-	ns
	t_{s1}	SDA to SCL	12	-	-	ns
SDA Hold Time	t_{h0}	SCEN to SCL	12	-	-	ns
	t_{h1}	SDA to SCL	12	-	-	ns
Pulse Width	t_{w1L}	SCL low pulse width	50	-	-	ns
	t_{w1H}	SCL high pulse width	50	-	-	ns
	t_{w2}	SCEN high pulse width	50	-	-	ns
Clock duty	-	-	40	50	60	%

Table 8.1: Serial Interface timing parameter

Himax Confidential
Do Not Copy

This information contained herein is the exclusive property of Himax and shall not be distributed, reproduced, or disclosed in whole or in part without prior written permission of Himax.

9. Power on/off Sequence

To prevent the device damage from latch up, the power on/off sequence shown below must be followed.

Power ON: VDD, VSS **à** VDDA, VSSA **à** V1 to V14
Power OFF: V1 to V14 **à** VDDA, VSSA **à** VDD, VSS

9.1 Power on/off control

HX8264-D03 has a power on/off sequence control function. In order to prevent IC from power on reset fail, the rising time (T_{POR}) of the digital power supply VDD should be maintained within the given specifications. Please refer to "AC Characteristics" for more detail on timing.

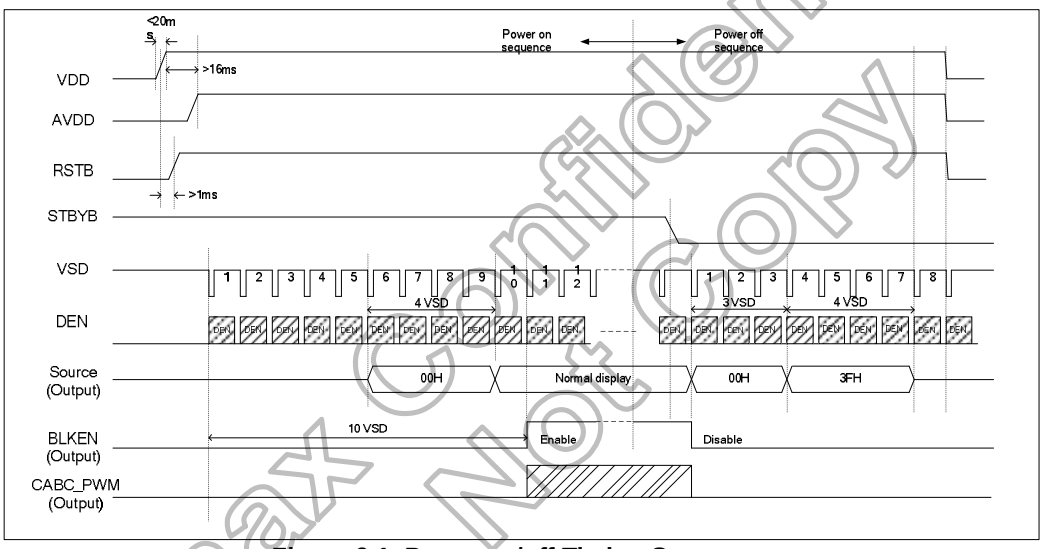

Figure 9.1: Power on/off Timing Sequence

9.2 Enter and exit standby mode sequence

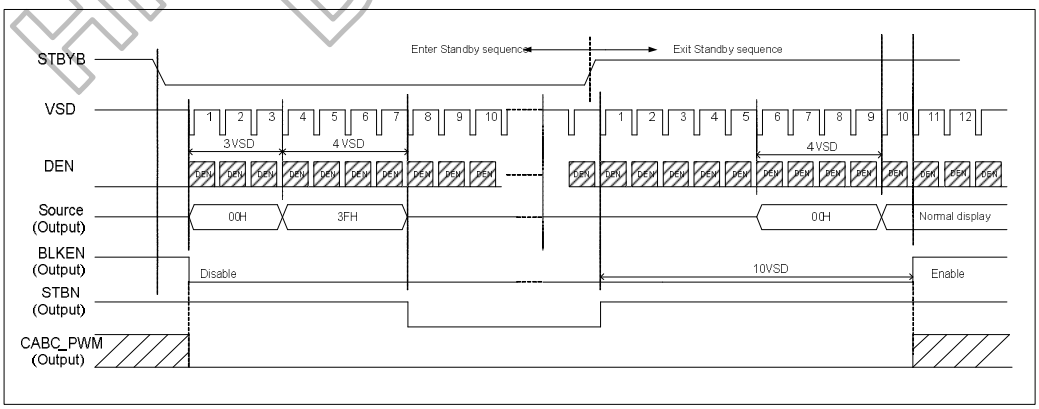

Figure 9.2: Enter and Exit Standby Mode Sequence

Himax Confidential
Do Not Copy

10. DC Characteristics

10.1 Absolute maximum rating (VSS=0V)

Parameter	Symbol	Spec.			Unit
		Min.	Typ.	Max.	
Power supply voltage 1	VDD	-0.5	-	+3.96	V
Power supply voltage 2	VDDA	-0.5	-	+14.85	V
Logic Output Voltage	V_{OUT}	-0.5	-	+5.0	V
Input voltage	Vin	-0.5	-	VDDA+0.5	V
Operation temperature	T_{OPR}	-30	-	+85	℃
Storage temperature	T_{STG}	-55	-	+125	℃

Note: (1) All of the voltages listed above are with respective to VSS=0V.
(2) Device is subject to be damaged permanently if stresses beyond those absolute maximum ratings listed above.

10.2 DC electrical characteristics (VSS=0V, T_A=25℃)

Parameter	Symbol	Spec.			Unit	Condition
		Min.	Typ.	Max.		
Power supply voltage	VDD	2.7	3.3	3.6	V	-
Power supply voltage	VDDA	6.5	-	13.5	V	-
Low level input voltage	V_{IL}	0	-	0.3VDD	V	For digital circuit
High level input voltage	V_{IH}	0.7VDD	-	VDD	V	For digital circuit
Output low voltage	V_{OL}	-	-	VSS+0.4	V	I_{OL}=400μA
Output high voltage	V_{OH}	VDD-0.4	-	-	V	I_{OH}=-400μA
Pull low/high resistance	R_i	200	250	300	kΩ	For the digital input pin @VDD=3.3V
Input leakage current	Ii	-	-	±1	uA	For digital circuit
Digital Operation current	Idd	-	5	14	mA	Dual gate mode or Cascade mode slave, Fclk=50MHz, LD=48KHz, VDD=3.3V, CABC disable, No load
		-	7	16	mA	Cascade mode master, Fclk=50MHz, LD=48KHz,VDD=3.3V, CABC disable, No load
Digital stand-by current	Ist1	-	10	50	μA	Clock & all functions are stopped
Analog Operating current	Idda	-	6	8	mA	No load, Fclk=50MHz,FLD=48KHz @ VDDA=10V, V1=8V, V14=0.4V
Analog Stand-by current	Ist2	-	10	50	μA	No load, clock & all functions are stopped
Input level of V1~V7	Vref1	0.4VDDA	-	VDDA-1	V	Gamma correction voltage input
Input level of V8~V14	Vref2	0.1	-	0.6VDDA	V	Gamma correction voltage input
Output Voltage deviation	Vod1	-	±20	±35	mV	Vo=VSSA+0.1V~VSSA+0.5V & Vo=VDDA-0.5V~VDDA-0.1V
Output Voltage deviation	Vod2	-	±15	±20	mV	Vo=VSSA+0.5V~VDDA-0.5V
Output Voltage Offset between Chips	Voc	-	-	±20	mV	Vo=VSSA+0.5V~VDDA-0.5V
Dynamic Range of Output	Vdr	0.1	-	VDDA-0.1	V	SO1~SO1200
Sinking Current of Outputs	IOLy	80	-	-	μA	SO1~SO1200; Vo=0.1V vs. 1.0V, VDDA=13.5V
Driving Current of Outputs	IOHy	80	-	-	μA	SO1~SO1200 ;Vo=0.1V vs. 12.5V, VDDA=13.5V
Resistance of Gamma Table	Rg	0.7*Rn	1.0*Rn	1.3*Rn	Ω	Rn: Internal gamma resistor

Himax Confidential
Do Not Copy

11. AC Characteristics

11.1 AC electrical characteristics

Parameter	Symbol	Spec.			Unit
		Min.	Typ.	Max.	
HS setup time	T_{hst}	8	-	-	ns
HS hold time	T_{hhd}	8	-	-	ns
VS setup time	T_{vst}	8	-	-	ns
VS hold time	T_{vhd}	8	-	-	ns
Data setup time	T_{dsu}	8	-	-	ns
Data hold time	T_{dhd}	8	-	-	ns
DE setup time	T_{esu}	8	-	-	ns
DE hold time	T_{ehd}	8	-	-	ns
VDD Power On Slew rate	T_{POR}	-	-	20	ms
RSTB pulse width	T_{Rst}	10	-	-	μs
CLKIN cycle time	T_{cph}	20	-	-	ns
CLKIN pulse duty	T_{cwh}	40	50	60	%
Output stable time	T_{sst}	-	-	6	μs

Himax Confidential
Do Not Copy

This information contained herein is the exclusive property of Himax and shall not be distributed, reproduced, or disclosed in whole or in part without prior written permission of Himax.

11.2 Data input format

I Horizontal timing

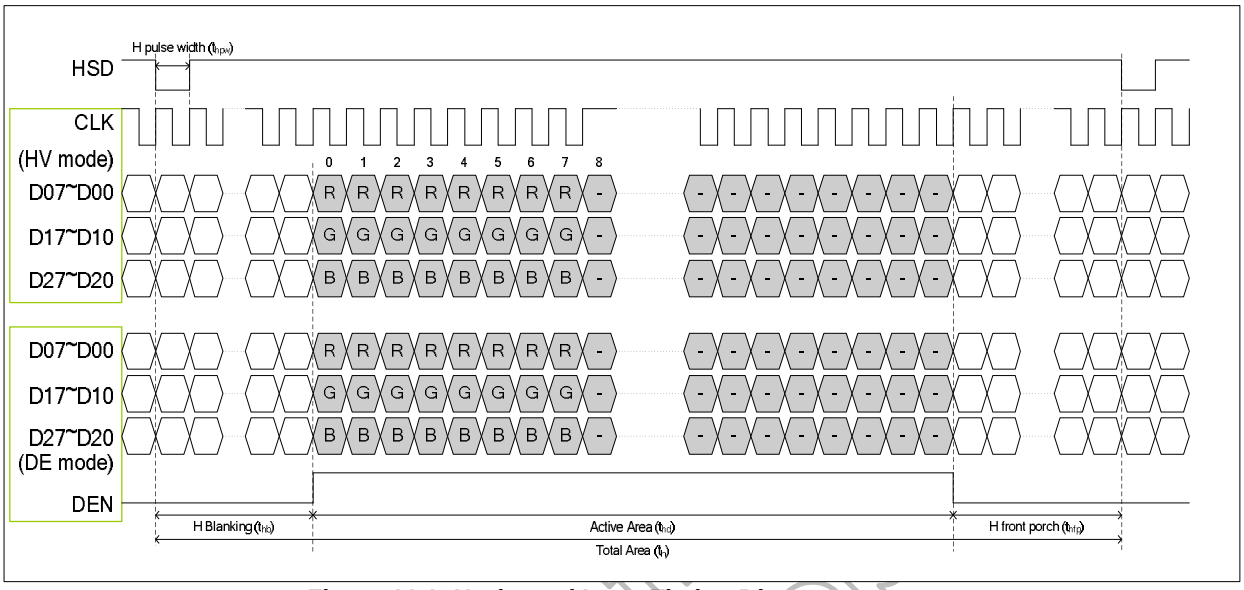

Figure 11.1: Horizontal Input Timing Diagram

I Vertical timing

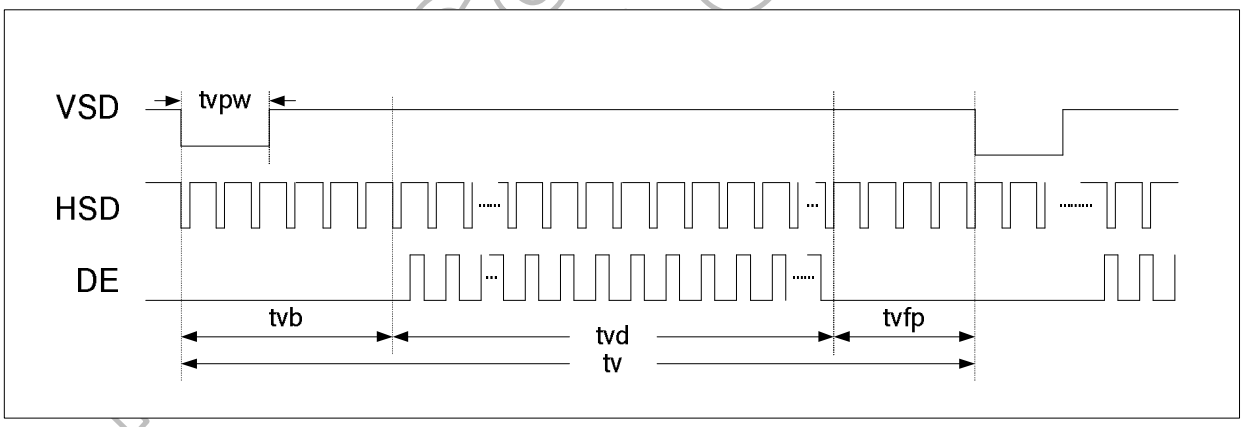

Figure 11.2: Vertical Input Timing Diagram

This information contained herein is the exclusive property of Himax and shall not be distributed, reproduced, or disclosed in whole or in part without prior written permission of Himax.

11.2.1 Resolution：800x480

I Horizontal timing

Parameter	Symbol	Spec.			Unit
		Min.	Typ.	Max.	
Horizontal Display Area	thd		800		DCLK
DCLK frequency	fclk	-	30	50	MHz
One Horizontal Line	th	889	928	1143	DCLK
HS pulse width	thpw	1	48	255	DCLK
HS Back Porch (Blanking)	thb		88		DCLK
HS Front Porch	thfp	1	40	255	DCLK
DE mode Blanking	th-thd	85	128	512	DCLK

I Vertical timing

Parameter	Symbol	Spec.			Unit
		Min.	Typ.	Max.	
Vertical Display Area	tvd		480		T_H
VS period time	tv	513	525	767	T_H
VS pulse width	tvpw	3	3	255	T_H
VS Back Porch (Blanking)	tvb		32		T_H
VS Front Porch	tvfp	1	13	255	T_H
DE mode Blanking	tv-tvd	4	45	255	T_H

Himax Confidential
Do Not Copy

This information contained herein is the exclusive property of Himax and shall not be distributed, reproduced, or disclosed in whole or in part without prior written permission of Himax.

11.2.2 Resolution：800x600

I Horizontal timing

Parameter	Symbol	Spec.			Unit
		Min.	Typ.	Max.	
Horizontal Display Area	thd		800		DCLK
DCLK frequency	fclk	-	40	50	MHz
One Horizontal Line	th	889	1000	1143	DCLK
HS pulse width	thpw	1	48	255	DCLK
HS Back Porch (Blanking)	thb		88		DCLK
HS Front Porch	thfp	1	112	255	DCLK
DE mode Blanking	th-thd	85	200	512	DCLK

I Vertical timing

Parameter	Symbol	Spec.			Unit
		Min.	Typ.	Max.	
Vertical Display Area	tvd		600		T_H
VS period time	tv	640	660	943	T_H
VS pulse width	tvpw	3	3	255	T_H
VS Back Porch (Blanking)	tvb		39		T_H
VS Front Porch	tvfp	1	21	255	T_H
DE mode Blanking	tv-tvd	4	60	255	T_H

Himax Confidential
Do Not Copy

This information contained herein is the exclusive property of Himax and shall not be distributed, reproduced, or disclosed in whole or in part without prior written permission of Himax.

11.2.3 Resolution：640x480

I Horizontal timing

Parameter	Symbol	Spec.			Unit
		Min.	Typ.	Max.	
Horizontal Display Area	thd		640		DCLK
DCLK frequency	fclk	-	24	50	MHz
One Horizontal Line	th	-	760	-	DCLK
HS pulse width	thpw	1	48	255	DCLK
HS Back Porch (Blanking)	thb		88		DCLK
HS Front Porch	thfp	1	32	255	DCLK
DE mode Blanking	th-thd	85	120	512	DCLK

I Vertical timing

Parameter	Symbol	Spec.			Unit
		Min.	Typ.	Max.	
Vertical Display Area	tvd		480		T_H
VS period time	tv	513	525	767	T_H
VS pulse width	tvpw	3	3	255	T_H
VS Back Porch (Blanking)	tvb		32		T_H
VS Front Porch	tvfp	1	13	255	T_H
DE mode Blanking	tv-tvd	4	45	255	T_H

Himax Confidential
Do Not Copy

This information contained herein is the exclusive property of Himax and shall not be distributed, reproduced, or disclosed in whole or in part without prior written permission of Himax.

11.2.4 Resolution：400x240

I Horizontal timing

Parameter	Symbol	Spec.			Unit
		Min.	Typ.	Max.	
Horizontal Display Area	thd		400		DCLK
DCLK frequency	fclk	-	8.4	50	MHz
One Horizontal Line	th	489	520	743	DCLK
HS pulse width	thpw	1	1	255	DCLK
HS Back Porch	thb		88		DCLK
HS Front Porch	thfp	1	32	255	DCLK
DE mode Blanking	th-thd	85	120	512	DCLK

I Vertical timing

Parameter	Symbol	Spec.			Unit
		Min.	Typ.	Max.	
Vertical Display Area	tvd		240		T_H
VS period time	tv	258	270	512	T_H
VS pulse width	tvpw	1	1	255	T_H
VS Back Porch	tvb		17		T_H
VS Front Porch	tvfp	1	13	255	T_H
DE mode Blanking	tv-tvd	4	30	255	T_H

Himax Confidential
Do Not Copy

This information contained herein is the exclusive property of Himax and shall not be distributed, reproduced, or disclosed in whole or in part without prior written permission of Himax.

12. Waveform

12.1 Timing waveform table

12.1.1 Parallel 24-bit RGB mode

Parameter	Symbol	Min.	Typ.	Max.	Unit	Conditions
CLKIN Frequency	Fclk	-	40	50	MHz	VDD=3.0V~3.6V
CLKIN Cycle Time	Tclk	20	25	-	ns	-
CLKIN Pulse Duty	Tcwh	40	50	60	%	Tclk
Time from HSD to Source Output	Thso		64		CLKIN	-
Time from HSD to LD	Thld		64		CLKIN	-
Time from HSD to STV	Thstv		2		CLKIN	-
Time from HSD to CKV	Thckv		20		CLKIN	-
Time from HSD to OEV	Thoev		4		CLKIN	-
LD Pulse Width	Twld		10		CLKIN	-
CKV Pulse Width	Twckv		66		CLKIN	-
OEV Pulse Width	Twoev		74		CLKIN	-

Table 12.1: Parallel 24-bit RGB mode

Himax Confidential
Do Not Copy

12.2 Timing diagram

12.2.1 Input clock and data timing waveform

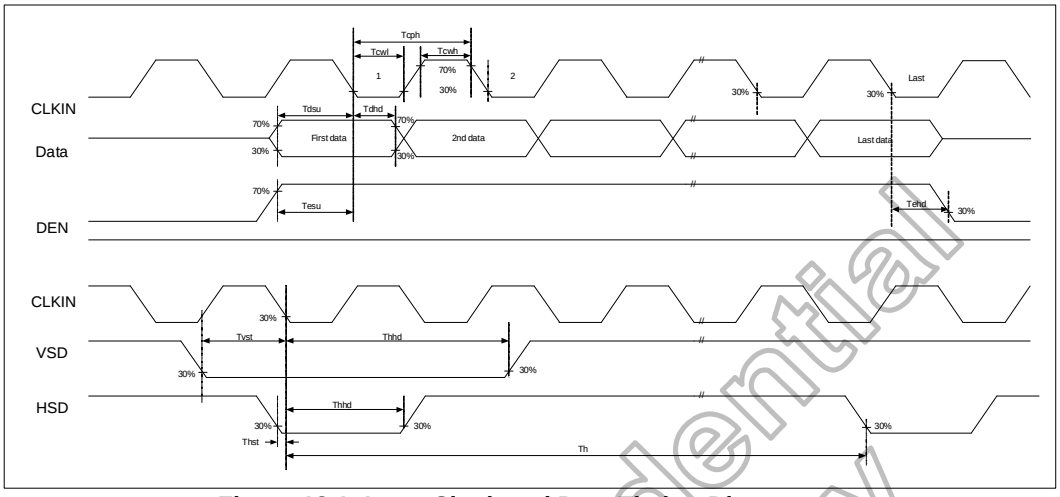

Figure 12.1: Input Clock and Data Timing Diagram

12.2.2 Source output timing waveform (Cascade)

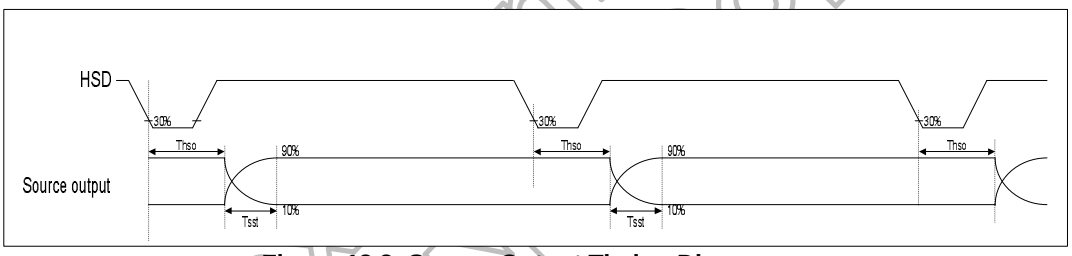

Figure 12.2: Source Output Timing Diagram

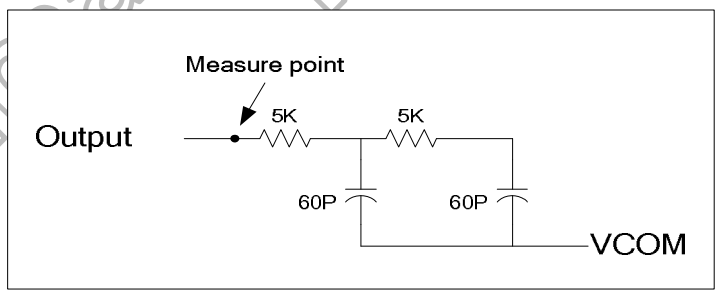

Figure 12.3: Output Load Condition

Himax Confidential
This information contained herein is the exclusive property of Himax and shall not be distributed, reproduced, or disclosed in whole or in part without prior written permission of Himax.

12.2.3 Vertical timing diagram HV (Cascade)

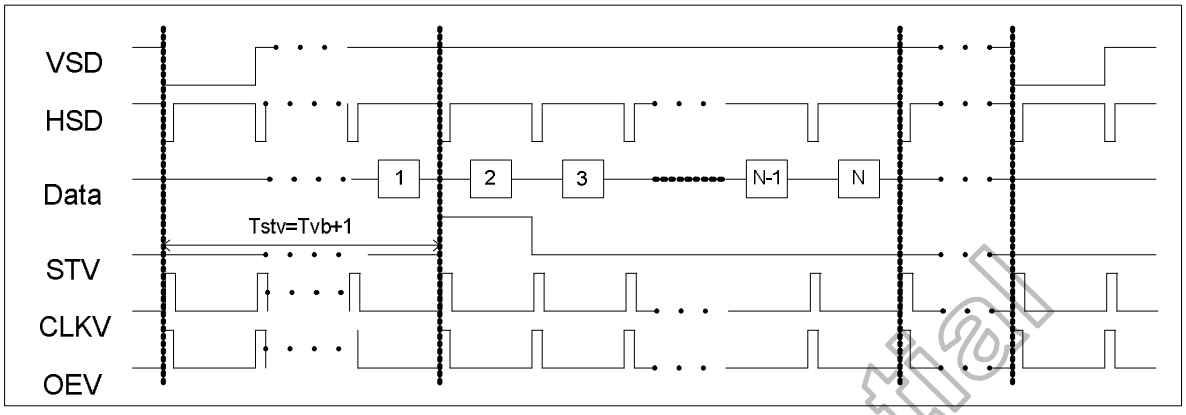

Figure 12.4: Vertical Timing Diagram HV (Cascade)

12.2.4 Vertical timing diagram DE (Cascade)

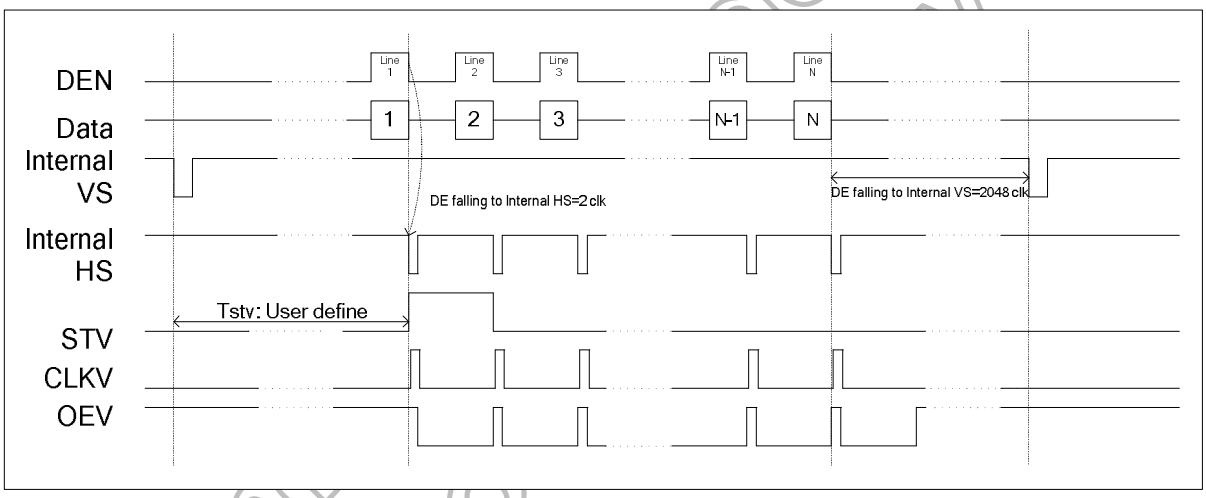

Figure 12.5: Vertical Timing Diagram DE (Cascade)

12.2.5 Gate output timing diagram (Cascade)

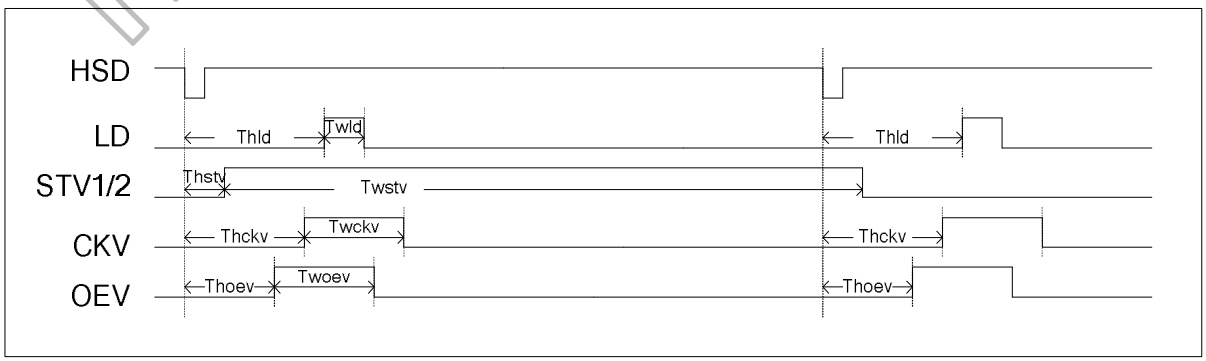

Figure 12.6: Gate Output Timing Diagram (Cascade)

Himax Confidential
Document

12.2.6 Vertical timing diagram HV (Dual gate)

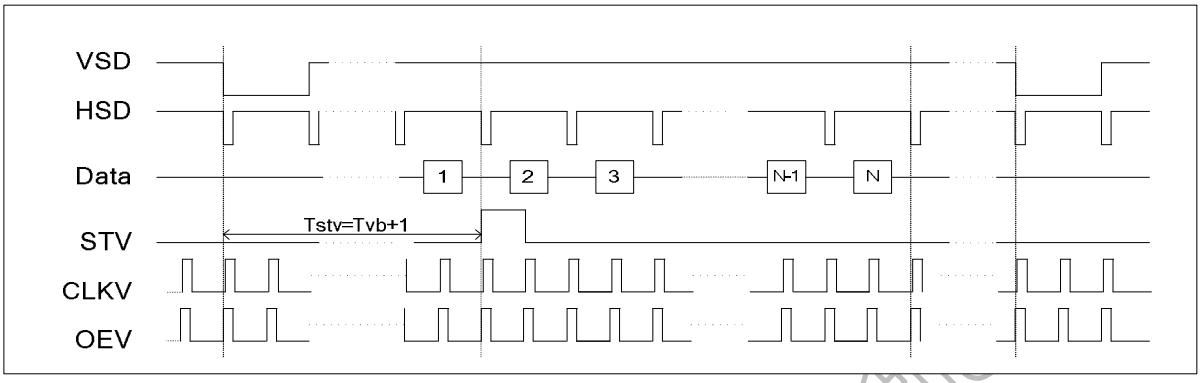

Figure 12.7: Vertical Timing Diagram HV (Dual Gate)

12.2.7 Vertical timing diagram DE (Dual gate)

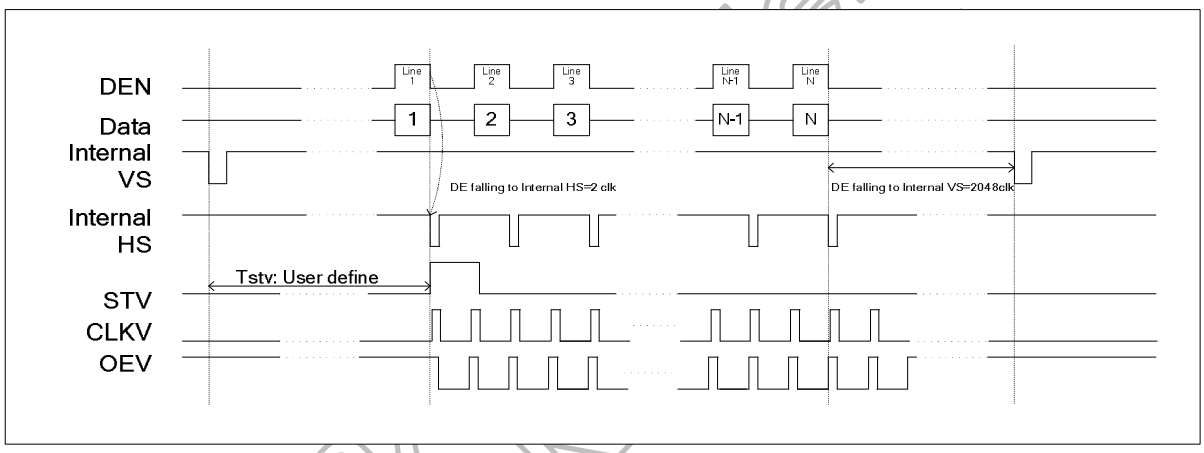

Figure 12.8: Vertical Timing Diagram DE (Dual Gate)

12.2.8 Gate output timing diagram (Dual gate)

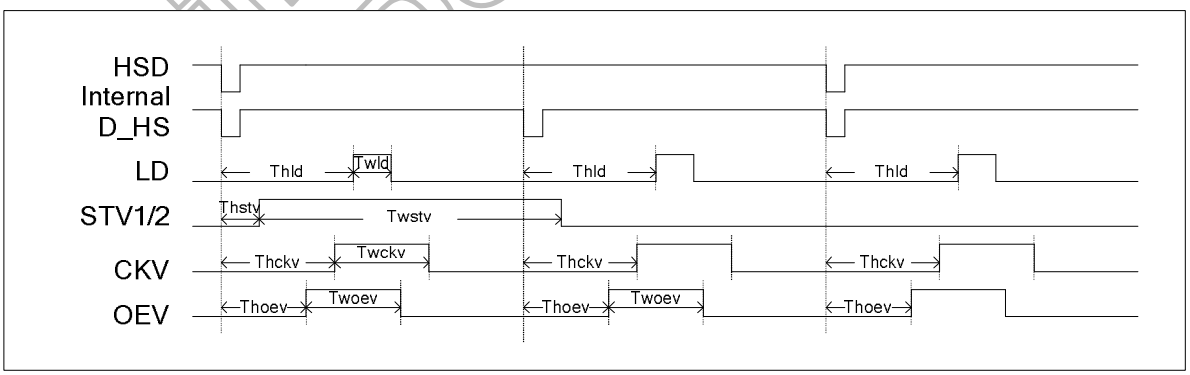

Figure 12.9: Gate Output Timing Diagram (Dual Gate)

This information contained herein is the exclusive property of Himax and shall not be distributed, reproduced, or disclosed in whole or in part without prior written permission of Himax.

13. Pin Assignment (IC Face View)

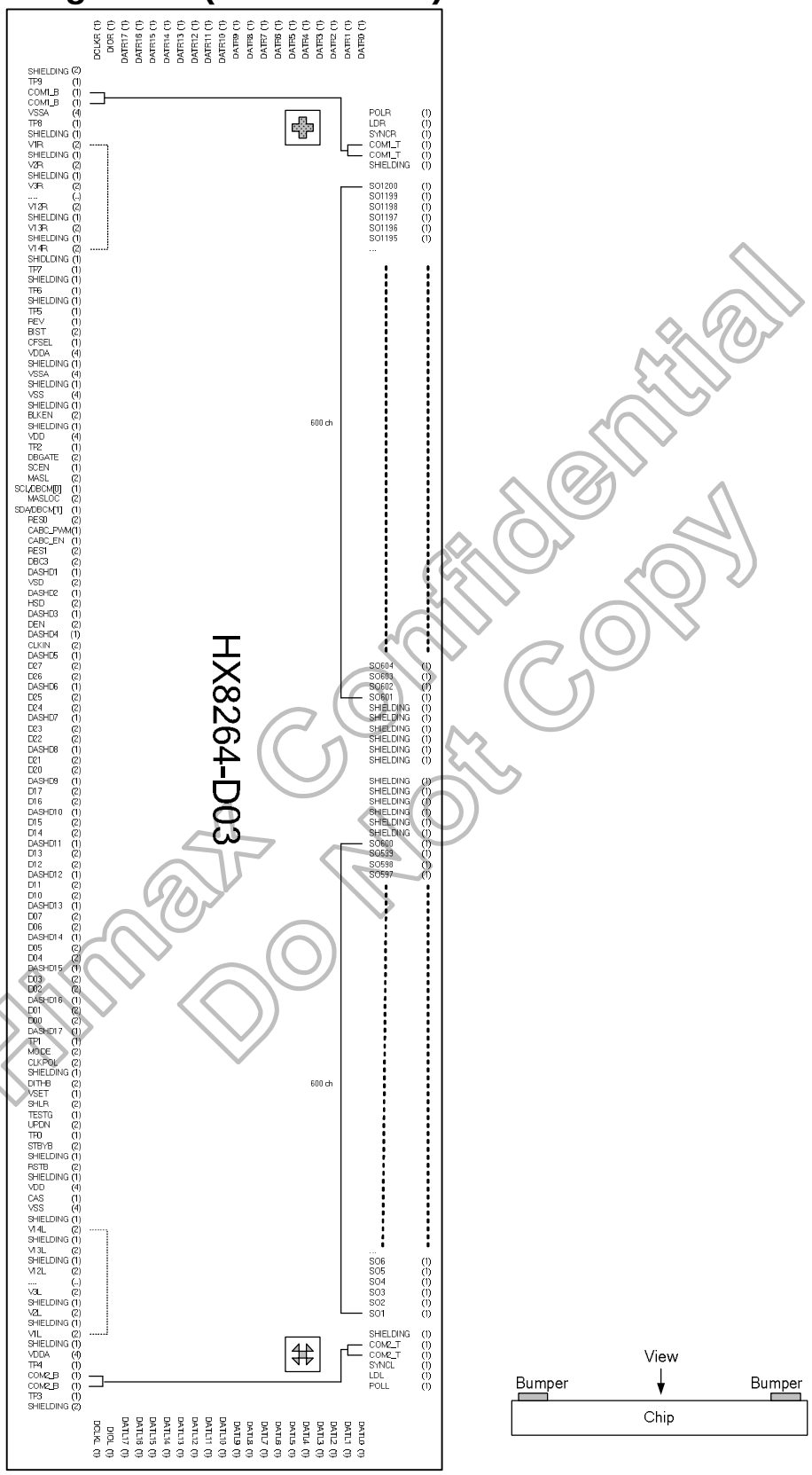

Figure 13.1: Pin Assignment

Himax Confidential
Do Not Copy

14. Package Outline

Chip size: 22578μm x 944μm (including seal ring and scribe line)

Bump height: 12μm±3μm or 9μm±2μm

Bump hardness: 60 H_V±15 H_V

Total bump area: 4256340 μm^2

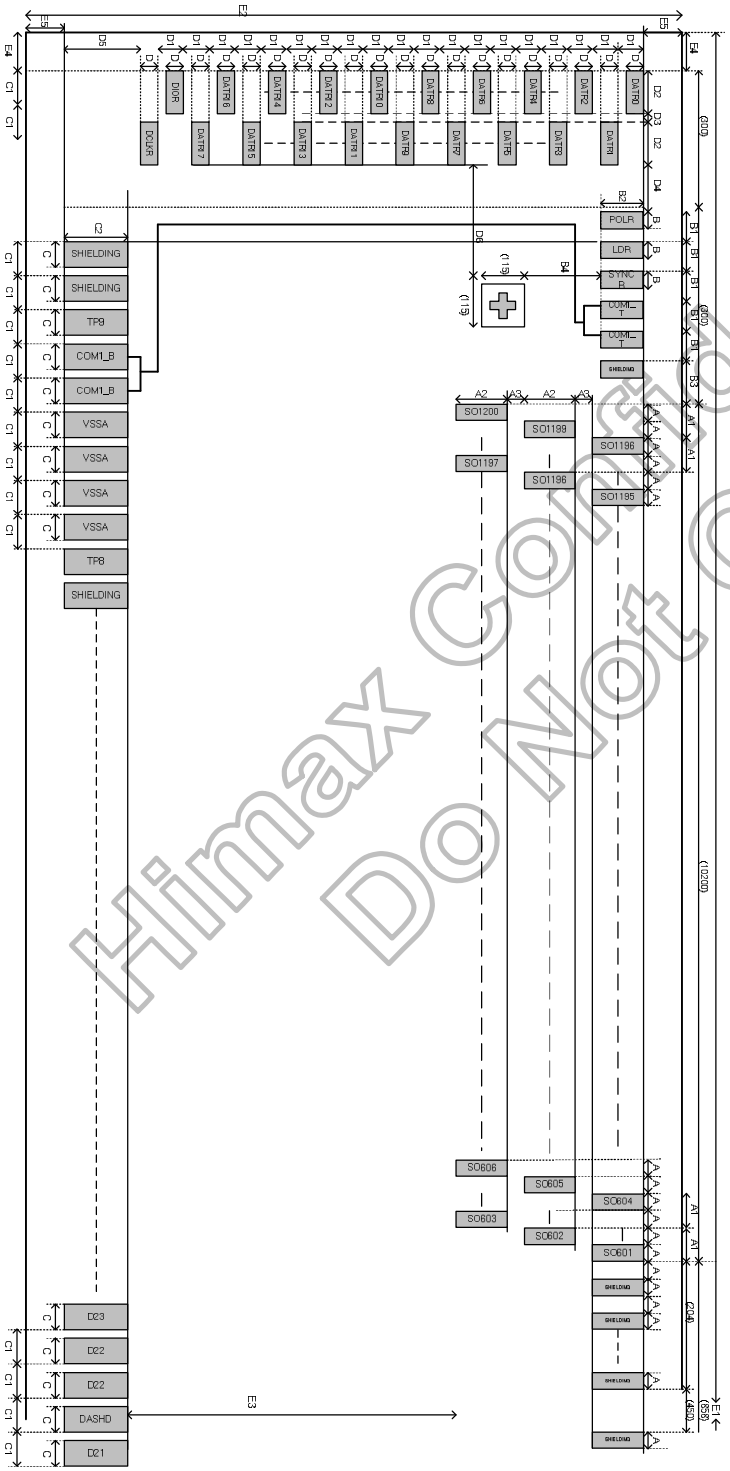

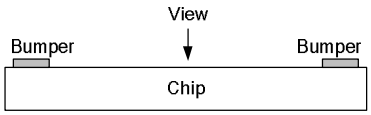

Himax Confidential
Do Not Copy

This information contained herein is the exclusive property of Himax and shall not be distributed, reproduced, or disclosed in whole or in part without prior written permission of Himax.

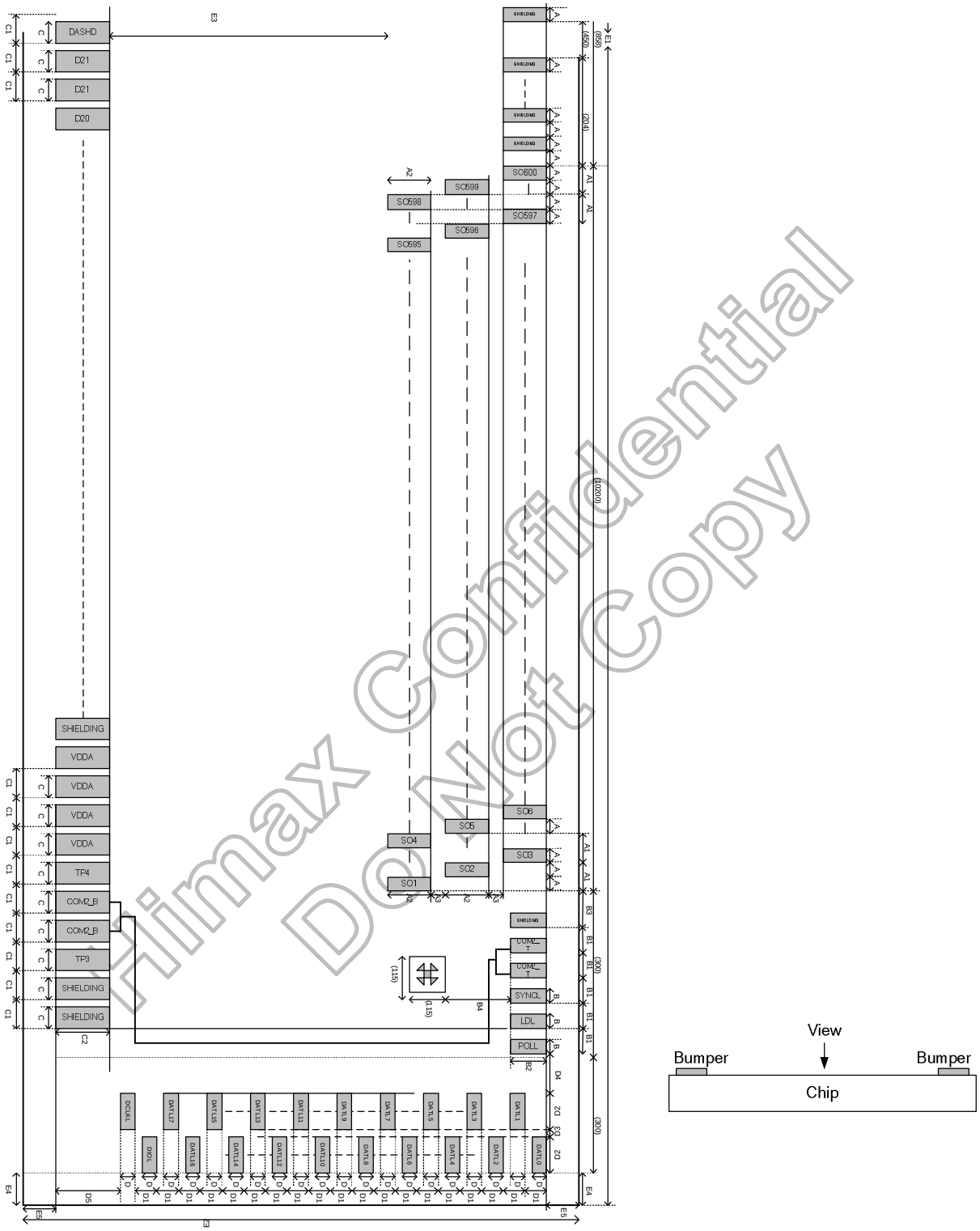

Figure 14.1: Package Outline

Himax Confidential
Do Not Copy

Alignment mark

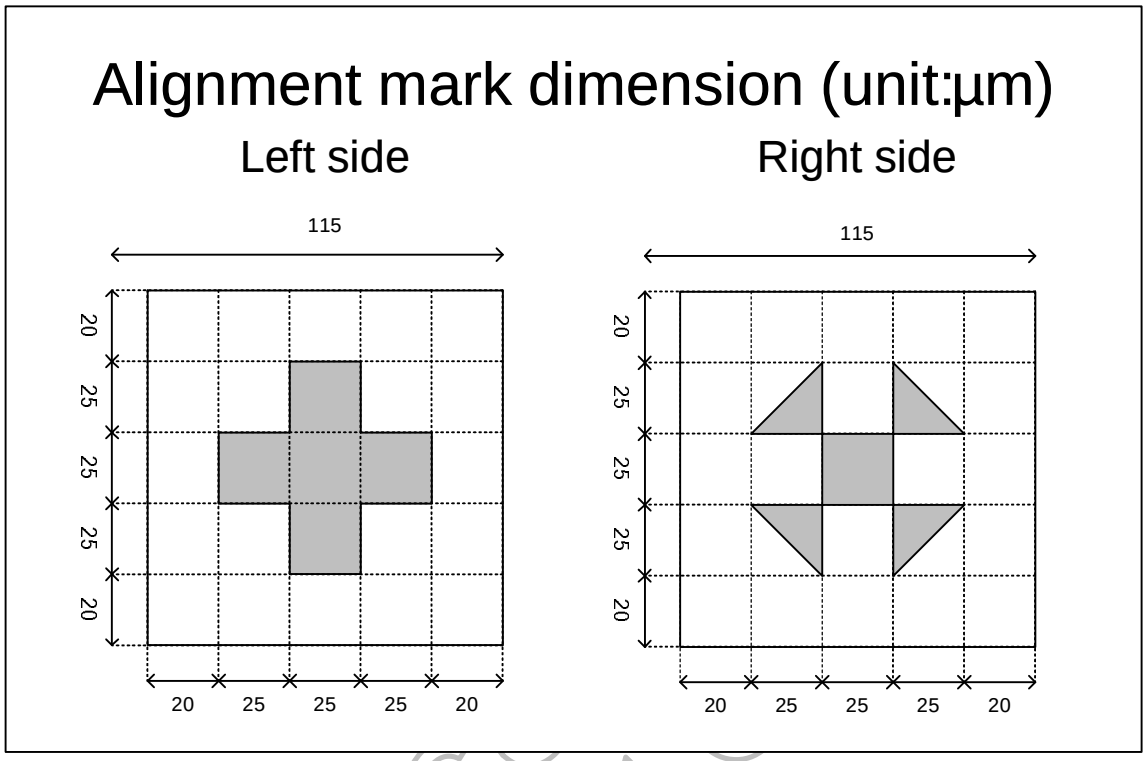

Figure 14.2: Alignment Mark

Pad information

Symbol	Dimension (um)
A	17
A1	34
A2	110
A3	30
B	30
B1	50
B2	70
B3	50
B4	191.5
C	65
C1	85
C2	110

Symbol	Dimension (um)
D	30
D1	40
D2	100
D3	30
D4	70
D5	34
D6	168.5
E1	22578
E2	944
E3	324
E4	60
E5	60

Table 14.1: Pad Information

Himax Confidential
Do Not

14.1 Pad coordinates

No.	Name	X	Y	Bump size
1	SHIELDING	-10922.5	-357	65x110
2	SHIELDING	-10837.5	-357	65x110
3	TP9	-10752.5	-357	65x110
4	COM1_B	-10667.5	-357	65x110
5	COM1_B	-10582.5	-357	65x110
6	VSSA	-10497.5	-357	65x110
7	VSSA	-10412.5	-357	65x110
8	VSSA	-10327.5	-357	65x110
9	VSSA	-10242.5	-357	65x110
10	TP8	-10157.5	-357	65x110
11	SHIELDING	-10072.5	-357	65x110
12	V1R	-9987.5	-357	65x110
13	V1R	-9902.5	-357	65x110
14	SHIELDING	-9817.5	-357	65x110
15	V2R	-9732.5	-357	65x110
16	V2R	-9647.5	-357	65x110
17	SHIELDING	-9562.5	-357	65x110
18	V3R	-9477.5	-357	65x110
19	V3R	-9392.5	-357	65x110
20	SHIELDING	-9307.5	-357	65x110
21	V4R	-9222.5	-357	65x110
22	V4R	-9137.5	-357	65x110
23	SHIELDING	-9052.5	-357	65x110
24	V5R	-8967.5	-357	65x110
25	V5R	-8882.5	-357	65x110
26	SHIELDING	-8797.5	-357	65x110
27	V6R	-8712.5	-357	65x110
28	V6R	-8627.5	-357	65x110
29	SHIELDING	-8542.5	-357	65x110
30	V7R	-8457.5	-357	65x110
31	V7R	-8372.5	-357	65x110
32	SHIELDING	-8287.5	-357	65x110
33	V8R	-8202.5	-357	65x110
34	V8R	-8117.5	-357	65x110
35	SHIELDING	-8032.5	-357	65x110
36	V9R	-7947.5	-357	65x110
37	V9R	-7862.5	-357	65x110
38	SHIELDING	-7777.5	-357	65x110
39	V10R	-7692.5	-357	65x110
40	V10R	-7607.5	-357	65x110
41	SHIELDING	-7522.5	-357	65x110
42	V11R	-7437.5	-357	65x110
43	V11R	-7352.5	-357	65x110
44	SHIELDING	-7267.5	-357	65x110
45	V12R	-7182.5	-357	65x110
46	V12R	-7097.5	-357	65x110
47	SHIELDING	-7012.5	-357	65x110
48	V13R	-6927.5	-357	65x110
49	V13R	-6842.5	-357	65x110
50	SHIELDING	-6757.5	-357	65x110

No.	Name	X	Y	Bump size
51	V14R	-6672.5	-357	65x110
52	V14R	-6587.5	-357	65x110
53	SHIELDING	-6502.5	-357	65x110
54	TP7	-6417.5	-357	65x110
55	SHIELDING	-6332.5	-357	65x110
56	TP6	-6247.5	-357	65x110
57	SHIELDING	-6162.5	-357	65x110
58	TP5	-6077.5	-357	65x110
59	REV	-5992.5	-357	65x110
60	BIST	-5907.5	-357	65x110
61	BIST	-5822.5	-357	65x110
62	CFSEL	-5737.5	-357	65x110
63	VDDA	-5652.5	-357	65x110
64	VDDA	-5567.5	-357	65x110
65	VDDA	-5482.5	-357	65x110
66	VDDA	-5397.5	-357	65x110
67	SHIELDING	-5312.5	-357	65x110
68	VSSA	-5227.5	-357	65x110
69	VSSA	-5142.5	-357	65x110
70	VSSA	-5057.5	-357	65x110
71	VSSA	-4972.5	-357	65x110
72	SHIELDING	-4887.5	-357	65x110
73	VSS	-4802.5	-357	65x110
74	VSS	-4717.5	-357	65x110
75	VSS	-4632.5	-357	65x110
76	VSS	-4547.5	-357	65x110
77	SHIELDING	-4462.5	-357	65x110
78	BLKEN	-4377.5	-357	65x110
79	BLKEN	-4292.5	-357	65x110
80	SHIELDING	-4207.5	-357	65x110
81	VDD	-4122.5	-357	65x110
82	VDD	-4037.5	-357	65x110
83	VDD	-3952.5	-357	65x110
84	VDD	-3867.5	-357	65x110
85	TP2	-3782.5	-357	65x110
86	DBGATE	-3697.5	-357	65x110
87	DBGATE	-3612.5	-357	65x110
88	SCEN	-3527.5	-357	65x110
89	MASL	-3442.5	-357	65x110
90	MASL	-3357.5	-357	65x110
91	SCL/DCM[0]	-3272.5	-357	65x110
92	MASLOC	-3187.5	-357	65x110
93	MASLOC	-3102.5	-357	65x110
94	SDA/DCM[1]	-3017.5	-357	65x110
95	RES0	-2932.5	-357	65x110
96	RES0	-2847.5	-357	65x110
97	CABC_PWM	-2762.5	-357	65x110
98	CABC_EN	-2677.5	-357	65x110
99	RES1	-2592.5	-357	65x110
100	RES1	-2507.5	-357	65x110

Himax Confidential
Do not copy

This information contained herein is the exclusive property of Himax and shall not be distributed, reproduced, or disclosed in whole or in part without prior written permission of Himax.

No.	Name	X	Y	Bump size
101	DBC3	-2422.5	-357	65x110
102	DBC3	-2337.5	-357	65x110
103	DASHD1	-2252.5	-357	65x110
104	VSD	-2167.5	-357	65x110
105	VSD	-2082.5	-357	65x110
106	DASHD2	-1997.5	-357	65x110
107	HSD	-1912.5	-357	65x110
108	HSD	-1827.5	-357	65x110
109	DASHD3	-1742.5	-357	65x110
110	DEN	-1657.5	-357	65x110
111	DEN	-1572.5	-357	65x110
112	DASHD4	-1487.5	-357	65x110
113	CLKIN	-1402.5	-357	65x110
114	CLKIN	-1317.5	-357	65x110
115	DASHD5	-1232.5	-357	65x110
116	D27	-1147.5	-357	65x110
117	D27	-1062.5	-357	65x110
118	D26	-977.5	-357	65x110
119	D26	-892.5	-357	65x110
120	DASHD6	-807.5	-357	65x110
121	D25	-722.5	-357	65x110
122	D25	-637.5	-357	65x110
123	D24	-552.5	-357	65x110
124	D24	-467.5	-357	65x110
125	DASHD7	-382.5	-357	65x110
126	D23	-297.5	-357	65x110
127	D23	-212.5	-357	65x110
128	D22	-127.5	-357	65x110
129	D22	-42.5	-357	65x110
130	DASHD8	42.5	-357	65x110
131	D21	127.5	-357	65x110
132	D21	212.5	-357	65x110
133	D20	297.5	-357	65x110
134	D20	382.5	-357	65x110
135	DASHD9	467.5	-357	65x110
136	D17	552.5	-357	65x110
137	D17	637.5	-357	65x110
138	D16	722.5	-357	65x110
139	D16	807.5	-357	65x110
140	DASHD10	892.5	-357	65x110
141	D15	977.5	-357	65x110
142	D15	1062.5	-357	65x110
143	D14	1147.5	-357	65x110
144	D14	1232.5	-357	65x110
145	DASHD11	1317.5	-357	65x110
146	D13	1402.5	-357	65x110
147	D13	1487.5	-357	65x110
148	D12	1572.5	-357	65x110
149	D12	1657.5	-357	65x110
150	DASHD12	1742.5	-357	65x110

No.	Name	X	Y	Bump size
151	D11	1827.5	-357	65x110
152	D11	1912.5	-357	65x110
153	D10	1997.5	-357	65x110
154	D10	2082.5	-357	65x110
155	DASHD13	2167.5	-357	65x110
156	D07	2252.5	-357	65x110
157	D07	2337.5	-357	65x110
158	D06	2422.5	-357	65x110
159	D06	2507.5	-357	65x110
160	DASHD14	2592.5	-357	65x110
161	D05	2677.5	-357	65x110
162	D05	2762.5	-357	65x110
163	D04	2847.5	-357	65x110
164	D04	2932.5	-357	65x110
165	DASHD15	3017.5	-357	65x110
166	D03	3102.5	-357	65x110
167	D03	3187.5	-357	65x110
168	D02	3272.5	-357	65x110
169	D02	3357.5	-357	65x110
170	DASHD16	3442.5	-357	65x110
171	D01	3527.5	-357	65x110
172	D01	3612.5	-357	65x110
173	D00	3697.5	-357	65x110
174	D00	3782.5	-357	65x110
175	DASHD17	3867.5	-357	65x110
176	TP1	3952.5	-357	65x110
177	MODE	4037.5	-357	65x110
178	MODE	4122.5	-357	65x110
179	CLKPOL	4207.5	-357	65x110
180	CLKPOL	4292.5	-357	65x110
181	SHIELDING	4377.5	-357	65x110
182	DITHB	4462.5	-357	65x110
183	DITHB	4547.5	-357	65x110
184	VSET	4632.5	-357	65x110
185	SHLR	4717.5	-357	65x110
186	SHLR	4802.5	-357	65x110
187	TESTG	4887.5	-357	65x110
188	UPDN	4972.5	-357	65x110
189	UPDN	5057.5	-357	65x110
190	TP0	5142.5	-357	65x110
191	STBYB	5227.5	-357	65x110
192	STBYB	5312.5	-357	65x110
193	SHIELDING	5397.5	-357	65x110
194	RSTB	5482.5	-357	65x110
195	RSTB	5567.5	-357	65x110
196	SHIELDING	5652.5	-357	65x110
197	VDD	5737.5	-357	65x110
198	VDD	5822.5	-357	65x110
199	VDD	5907.5	-357	65x110
200	VDD	5992.5	-357	65x110

Himax Confidential
Do Not Copy

This information contained herein is the exclusive property of Himax and shall not be distributed, reproduced, or disclosed in whole or in part without prior written permission of Himax.

No.	Name	X	Y	Bump size
201	CAS	6077.5	-357	65x110
202	VSS	6162.5	-357	65x110
203	VSS	6247.5	-357	65x110
204	VSS	6332.5	-357	65x110
205	VSS	6417.5	-357	65x110
206	SHIELDING	6502.5	-357	65x110
207	V14L	6587.5	-357	65x110
208	V14L	6672.5	-357	65x110
209	SHIELDING	6757.5	-357	65x110
210	V13L	6842.5	-357	65x110
211	V13L	6927.5	-357	65x110
212	SHIELDING	7012.5	-357	65x110
213	V12L	7097.5	-357	65x110
214	V12L	7182.5	-357	65x110
215	SHIELDING	7267.5	-357	65x110
216	V11L	7352.5	-357	65x110
217	V11L	7437.5	-357	65x110
218	SHIELDING	7522.5	-357	65x110
219	V10L	7607.5	-357	65x110
220	V10L	7692.5	-357	65x110
221	SHIELDING	7777.5	-357	65x110
222	V9L	7862.5	-357	65x110
223	V9L	7947.5	-357	65x110
224	SHIELDING	8032.5	-357	65x110
225	V8L	8117.5	-357	65x110
226	V8L	8202.5	-357	65x110
227	SHIELDING	8287.5	-357	65x110
228	V7L	8372.5	-357	65x110
229	V7L	8457.5	-357	65x110
230	SHIELDING	8542.5	-357	65x110
231	V6L	8627.5	-357	65x110
232	V6L	8712.5	-357	65x110
233	SHIELDING	8797.5	-357	65x110
234	V5L	8882.5	-357	65x110
235	V5L	8967.5	-357	65x110
236	SHIELDING	9052.5	-357	65x110
237	V4L	9137.5	-357	65x110
238	V4L	9222.5	-357	65x110
239	SHIELDING	9307.5	-357	65x110
240	V3L	9392.5	-357	65x110
241	V3L	9477.5	-357	65x110
242	SHIELDING	9562.5	-357	65x110
243	V2L	9647.5	-357	65x110
244	V2L	9732.5	-357	65x110
245	SHIELDING	9817.5	-357	65x110
246	V1L	9902.5	-357	65x110
247	V1L	9987.5	-357	65x110
248	SHIELDING	10072.5	-357	65x110
249	VDDA	10157.5	-357	65x110
250	VDDA	10242.5	-357	65x110

No.	Name	X	Y	Bump size
251	VDDA	10327.5	-357	65x110
252	VDDA	10412.5	-357	65x110
253	TP4	10497.5	-357	65x110
254	COM2_B	10582.5	-357	65x110
255	COM2_B	10667.5	-357	65x110
256	TP3	10752.5	-357	65x110
257	SHIELDING	10837.5	-357	65x110
258	SHIELDING	10922.5	-357	65x110
259	DCLKL	11049	-363	100x30
260	DIOL	11179	-323	100x30
261	DATL17	11049	-283	100x30
262	DATL16	11179	-243	100x30
263	DATL15	11049	-203	100x30
264	DATL14	11179	-163	100x30
265	DATL13	11049	-123	100x30
266	DATL12	11179	-83	100x30
267	DATL11	11049	-43	100x30
268	DATL10	11179	-3	100x30
269	DATL9	11049	37	100x30
270	DATL8	11179	77	100x30
271	DATL7	11049	117	100x30
272	DATL6	11179	157	100x30
273	DATL5	11049	197	100x30
274	DATL4	11179	237	100x30
275	DATL3	11049	277	100x30
276	DATL2	11179	317	100x30
277	DATL1	11049	357	100x30
278	DATL0	11179	397	100x30
279	POLL	10914	377	30x70
280	LDL	10864	377	30x70
281	SYNCL	10814	377	30x70
282	COM2_T	10764	377	30x70
283	COM2_T	10714	377	30x70
284	SHIELDING	10664	377	30x70
285	SO1	10620.5	77	17x110
286	SO2	10603.5	217	17x110
287	SO3	10586.5	357	17x110
288	SO4	10569.5	77	17x110
289	SO5	10552.5	217	17x110
290	SO6	10535.5	357	17x110
291	SO7	10518.5	77	17x110
292	SO8	10501.5	217	17x110
293	SO9	10484.5	357	17x110
294	SO10	10467.5	77	17x110
295	SO11	10450.5	217	17x110
296	SO12	10433.5	357	17x110
297	SO13	10416.5	77	17x110
298	SO14	10399.5	217	17x110
299	SO15	10382.5	357	17x110
300	SO16	10365.5	77	17x110

Himax Confidential
Do Not Copy

This information contained herein is the exclusive property of Himax and shall not be distributed, reproduced, or disclosed in whole or in part without prior written permission of Himax.

No.	Name	X	Y	Bump size
301	SO17	10348.5	217	17x110
302	SO18	10331.5	357	17x110
303	SO19	10314.5	77	17x110
304	SO20	10297.5	217	17x110
305	SO21	10280.5	357	17x110
306	SO22	10263.5	77	17x110
307	SO23	10246.5	217	17x110
308	SO24	10229.5	357	17x110
309	SO25	10212.5	77	17x110
310	SO26	10195.5	217	17x110
311	SO27	10178.5	357	17x110
312	SO28	10161.5	77	17x110
313	SO29	10144.5	217	17x110
314	SO30	10127.5	357	17x110
315	SO31	10110.5	77	17x110
316	SO32	10093.5	217	17x110
317	SO33	10076.5	357	17x110
318	SO34	10059.5	77	17x110
319	SO35	10042.5	217	17x110
320	SO36	10025.5	357	17x110
321	SO37	10008.5	77	17x110
322	SO38	9991.5	217	17x110
323	SO39	9974.5	357	17x110
324	SO40	9957.5	77	17x110
325	SO41	9940.5	217	17x110
326	SO42	9923.5	357	17x110
327	SO43	9906.5	77	17x110
328	SO44	9889.5	217	17x110
329	SO45	9872.5	357	17x110
330	SO46	9855.5	77	17x110
331	SO47	9838.5	217	17x110
332	SO48	9821.5	357	17x110
333	SO49	9804.5	77	17x110
334	SO50	9787.5	217	17x110
335	SO51	9770.5	357	17x110
336	SO52	9753.5	77	17x110
337	SO53	9736.5	217	17x110
338	SO54	9719.5	357	17x110
339	SO55	9702.5	77	17x110
340	SO56	9685.5	217	17x110
341	SO57	9668.5	357	17x110
342	SO58	9651.5	77	17x110
343	SO59	9634.5	217	17x110
344	SO60	9617.5	357	17x110
345	SO61	9600.5	77	17x110
346	SO62	9583.5	217	17x110
347	SO63	9566.5	357	17x110
348	SO64	9549.5	77	17x110
349	SO65	9532.5	217	17x110
350	SO66	9515.5	357	17x110

No.	Name	X	Y	Bump size
351	SO67	9498.5	77	17x110
352	SO68	9481.5	217	17x110
353	SO69	9464.5	357	17x110
354	SO70	9447.5	77	17x110
355	SO71	9430.5	217	17x110
356	SO72	9413.5	357	17x110
357	SO73	9396.5	77	17x110
358	SO74	9379.5	217	17x110
359	SO75	9362.5	357	17x110
360	SO76	9345.5	77	17x110
361	SO77	9328.5	217	17x110
362	SO78	9311.5	357	17x110
363	SO79	9294.5	77	17x110
364	SO80	9277.5	217	17x110
365	SO81	9260.5	357	17x110
366	SO82	9243.5	77	17x110
367	SO83	9226.5	217	17x110
368	SO84	9209.5	357	17x110
369	SO85	9192.5	77	17x110
370	SO86	9175.5	217	17x110
371	SO87	9158.5	357	17x110
372	SO88	9141.5	77	17x110
373	SO89	9124.5	217	17x110
374	SO90	9107.5	357	17x110
375	SO91	9090.5	77	17x110
376	SO92	9073.5	217	17x110
377	SO93	9056.5	357	17x110
378	SO94	9039.5	77	17x110
379	SO95	9022.5	217	17x110
380	SO96	9005.5	357	17x110
381	SO97	8988.5	77	17x110
382	SO98	8971.5	217	17x110
383	SO99	8954.5	357	17x110
384	SO100	8937.5	77	17x110
385	SO101	8920.5	217	17x110
386	SO102	8903.5	357	17x110
387	SO103	8886.5	77	17x110
388	SO104	8869.5	217	17x110
389	SO105	8852.5	357	17x110
390	SO106	8835.5	77	17x110
391	SO107	8818.5	217	17x110
392	SO108	8801.5	357	17x110
393	SO109	8784.5	77	17x110
394	SO110	8767.5	217	17x110
395	SO111	8750.5	357	17x110
396	SO112	8733.5	77	17x110
397	SO113	8716.5	217	17x110
398	SO114	8699.5	357	17x110
399	SO115	8682.5	77	17x110
400	SO116	8665.5	217	17x110

Himax Confidential
Do Not Copy

This information contained herein is the exclusive property of Himax and shall not be distributed, reproduced, or disclosed in whole or in part without prior written permission of Himax.

No.	Name	X	Y	Bump size
401	SO117	8648.5	357	17x110
402	SO118	8631.5	77	17x110
403	SO119	8614.5	217	17x110
404	SO120	8597.5	357	17x110
405	SO121	8580.5	77	17x110
406	SO122	8563.5	217	17x110
407	SO123	8546.5	357	17x110
408	SO124	8529.5	77	17x110
409	SO125	8512.5	217	17x110
410	SO126	8495.5	357	17x110
411	SO127	8478.5	77	17x110
412	SO128	8461.5	217	17x110
413	SO129	8444.5	357	17x110
414	SO130	8427.5	77	17x110
415	SO131	8410.5	217	17x110
416	SO132	8393.5	357	17x110
417	SO133	8376.5	77	17x110
418	SO134	8359.5	217	17x110
419	SO135	8342.5	357	17x110
420	SO136	8325.5	77	17x110
421	SO137	8308.5	217	17x110
422	SO138	8291.5	357	17x110
423	SO139	8274.5	77	17x110
424	SO140	8257.5	217	17x110
425	SO141	8240.5	357	17x110
426	SO142	8223.5	77	17x110
427	SO143	8206.5	217	17x110
428	SO144	8189.5	357	17x110
429	SO145	8172.5	77	17x110
430	SO146	8155.5	217	17x110
431	SO147	8138.5	357	17x110
432	SO148	8121.5	77	17x110
433	SO149	8104.5	217	17x110
434	SO150	8087.5	357	17x110
435	SO151	8070.5	77	17x110
436	SO152	8053.5	217	17x110
437	SO153	8036.5	357	17x110
438	SO154	8019.5	77	17x110
439	SO155	8002.5	217	17x110
440	SO156	7985.5	357	17x110
441	SO157	7968.5	77	17x110
442	SO158	7951.5	217	17x110
443	SO159	7934.5	357	17x110
444	SO160	7917.5	77	17x110
445	SO161	7900.5	217	17x110
446	SO162	7883.5	357	17x110
447	SO163	7866.5	77	17x110
448	SO164	7849.5	217	17x110
449	SO165	7832.5	357	17x110
450	SO166	7815.5	77	17x110

No.	Name	X	Y	Bump size
451	SO167	7798.5	217	17x110
452	SO168	7781.5	357	17x110
453	SO169	7764.5	77	17x110
454	SO170	7747.5	217	17x110
455	SO171	7730.5	357	17x110
456	SO172	7713.5	77	17x110
457	SO173	7696.5	217	17x110
458	SO174	7679.5	357	17x110
459	SO175	7662.5	77	17x110
460	SO176	7645.5	217	17x110
461	SO177	7628.5	357	17x110
462	SO178	7611.5	77	17x110
463	SO179	7594.5	217	17x110
464	SO180	7577.5	357	17x110
465	SO181	7560.5	77	17x110
466	SO182	7543.5	217	17x110
467	SO183	7526.5	357	17x110
468	SO184	7509.5	77	17x110
469	SO185	7492.5	217	17x110
470	SO186	7475.5	357	17x110
471	SO187	7458.5	77	17x110
472	SO188	7441.5	217	17x110
473	SO189	7424.5	357	17x110
474	SO190	7407.5	77	17x110
475	SO191	7390.5	217	17x110
476	SO192	7373.5	357	17x110
477	SO193	7356.5	77	17x110
478	SO194	7339.5	217	17x110
479	SO195	7322.5	357	17x110
480	SO196	7305.5	77	17x110
481	SO197	7288.5	217	17x110
482	SO198	7271.5	357	17x110
483	SO199	7254.5	77	17x110
484	SO200	7237.5	217	17x110
485	SO201	7220.5	357	17x110
486	SO202	7203.5	77	17x110
487	SO203	7186.5	217	17x110
488	SO204	7169.5	357	17x110
489	SO205	7152.5	77	17x110
490	SO206	7135.5	217	17x110
491	SO207	7118.5	357	17x110
492	SO208	7101.5	77	17x110
493	SO209	7084.5	217	17x110
494	SO210	7067.5	357	17x110
495	SO211	7050.5	77	17x110
496	SO212	7033.5	217	17x110
497	SO213	7016.5	357	17x110
498	SO214	6999.5	77	17x110
499	SO215	6982.5	217	17x110
500	SO216	6965.5	357	17x110

Himax Confidential
Do Not Copy

This information contained herein is the exclusive property of Himax and shall not be distributed, reproduced, or disclosed in whole or in part without prior written permission of Himax.

No.	Name	X	Y	Bump size
501	SO217	6948.5	77	17x110
502	SO218	6931.5	217	17x110
503	SO219	6914.5	357	17x110
504	SO220	6897.5	77	17x110
505	SO221	6880.5	217	17x110
506	SO222	6863.5	357	17x110
507	SO223	6846.5	77	17x110
508	SO224	6829.5	217	17x110
509	SO225	6812.5	357	17x110
510	SO226	6795.5	77	17x110
511	SO227	6778.5	217	17x110
512	SO228	6761.5	357	17x110
513	SO229	6744.5	77	17x110
514	SO230	6727.5	217	17x110
515	SO231	6710.5	357	17x110
516	SO232	6693.5	77	17x110
517	SO233	6676.5	217	17x110
518	SO234	6659.5	357	17x110
519	SO235	6642.5	77	17x110
520	SO236	6625.5	217	17x110
521	SO237	6608.5	357	17x110
522	SO238	6591.5	77	17x110
523	SO239	6574.5	217	17x110
524	SO240	6557.5	357	17x110
525	SO241	6540.5	77	17x110
526	SO242	6523.5	217	17x110
527	SO243	6506.5	357	17x110
528	SO244	6489.5	77	17x110
529	SO245	6472.5	217	17x110
530	SO246	6455.5	357	17x110
531	SO247	6438.5	77	17x110
532	SO248	6421.5	217	17x110
533	SO249	6404.5	357	17x110
534	SO250	6387.5	77	17x110
535	SO251	6370.5	217	17x110
536	SO252	6353.5	357	17x110
537	SO253	6336.5	77	17x110
538	SO254	6319.5	217	17x110
539	SO255	6302.5	357	17x110
540	SO256	6285.5	77	17x110
541	SO257	6268.5	217	17x110
542	SO258	6251.5	357	17x110
543	SO259	6234.5	77	17x110
544	SO260	6217.5	217	17x110
545	SO261	6200.5	357	17x110
546	SO262	6183.5	77	17x110
547	SO263	6166.5	217	17x110
548	SO264	6149.5	357	17x110
549	SO265	6132.5	77	17x110
550	SO266	6115.5	217	17x110

No.	Name	X	Y	Bump size
551	SO267	6098.5	357	17x110
552	SO268	6081.5	77	17x110
553	SO269	6064.5	217	17x110
554	SO270	6047.5	357	17x110
555	SO271	6030.5	77	17x110
556	SO272	6013.5	217	17x110
557	SO273	5996.5	357	17x110
558	SO274	5979.5	77	17x110
559	SO275	5962.5	217	17x110
560	SO276	5945.5	357	17x110
561	SO277	5928.5	77	17x110
562	SO278	5911.5	217	17x110
563	SO279	5894.5	357	17x110
564	SO280	5877.5	77	17x110
565	SO281	5860.5	217	17x110
566	SO282	5843.5	357	17x110
567	SO283	5826.5	77	17x110
568	SO284	5809.5	217	17x110
569	SO285	5792.5	357	17x110
570	SO286	5775.5	77	17x110
571	SO287	5758.5	217	17x110
572	SO288	5741.5	357	17x110
573	SO289	5724.5	77	17x110
574	SO290	5707.5	217	17x110
575	SO291	5690.5	357	17x110
576	SO292	5673.5	77	17x110
577	SO293	5656.5	217	17x110
578	SO294	5639.5	357	17x110
579	SO295	5622.5	77	17x110
580	SO296	5605.5	217	17x110
581	SO297	5588.5	357	17x110
582	SO298	5571.5	77	17x110
583	SO299	5554.5	217	17x110
584	SO300	5537.5	357	17x110
585	SO301	5520.5	77	17x110
586	SO302	5503.5	217	17x110
587	SO303	5486.5	357	17x110
588	SO304	5469.5	77	17x110
589	SO305	5452.5	217	17x110
590	SO306	5435.5	357	17x110
591	SO307	5418.5	77	17x110
592	SO308	5401.5	217	17x110
593	SO309	5384.5	357	17x110
594	SO310	5367.5	77	17x110
595	SO311	5350.5	217	17x110
596	SO312	5333.5	357	17x110
597	SO313	5316.5	77	17x110
598	SO314	5299.5	217	17x110
599	SO315	5282.5	357	17x110
600	SO316	5265.5	77	17x110

Himax Confidential
Do Not Copy

This information contained herein is the exclusive property of Himax and shall not be distributed, reproduced, or disclosed in whole or in part without prior written permission of Himax.

No.	Nam	X	Y	Bump size
601	SO317	5248.5	217	17x110
602	SO318	5231.5	357	17x110
603	SO319	5214.5	77	17x110
604	SO320	5197.5	217	17x110
605	SO321	5180.5	357	17x110
606	SO322	5163.5	77	17x110
607	SO323	5146.5	217	17x110
608	SO324	5129.5	357	17x110
609	SO325	5112.5	77	17x110
610	SO326	5095.5	217	17x110
611	SO327	5078.5	357	17x110
612	SO328	5061.5	77	17x110
613	SO329	5044.5	217	17x110
614	SO330	5027.5	357	17x110
615	SO331	5010.5	77	17x110
616	SO332	4993.5	217	17x110
617	SO333	4976.5	357	17x110
618	SO334	4959.5	77	17x110
619	SO335	4942.5	217	17x110
620	SO336	4925.5	357	17x110
621	SO337	4908.5	77	17x110
622	SO338	4891.5	217	17x110
623	SO339	4874.5	357	17x110
624	SO340	4857.5	77	17x110
625	SO341	4840.5	217	17x110
626	SO342	4823.5	357	17x110
627	SO343	4806.5	77	17x110
628	SO344	4789.5	217	17x110
629	SO345	4772.5	357	17x110
630	SO346	4755.5	77	17x110
631	SO347	4738.5	217	17x110
632	SO348	4721.5	357	17x110
633	SO349	4704.5	77	17x110
634	SO350	4687.5	217	17x110
635	SO351	4670.5	357	17x110
636	SO352	4653.5	77	17x110
637	SO353	4636.5	217	17x110
638	SO354	4619.5	357	17x110
639	SO355	4602.5	77	17x110
640	SO356	4585.5	217	17x110
641	SO357	4568.5	357	17x110
642	SO358	4551.5	77	17x110
643	SO359	4534.5	217	17x110
644	SO360	4517.5	357	17x110
645	SO361	4500.5	77	17x110
646	SO362	4483.5	217	17x110
647	SO363	4466.5	357	17x110
648	SO364	4449.5	77	17x110
649	SO365	4432.5	217	17x110
650	SO366	4415.5	357	17x110

No.		X	Y	Bump size
651	SO367	4398.5	77	17x110
652	SO368	4381.5	217	17x110
653	SO369	4364.5	357	17x110
654	SO370	4347.5	77	17x110
655	SO371	4330.5	217	17x110
656	SO372	4313.5	357	17x110
657	SO373	4296.5	77	17x110
658	SO374	4279.5	217	17x110
659	SO375	4262.5	357	17x110
660	SO376	4245.5	77	17x110
661	SO377	4228.5	217	17x110
662	SO378	4211.5	357	17x110
663	SO379	4194.5	77	17x110
664	SO380	4177.5	217	17x110
665	SO381	4160.5	357	17x110
666	SO382	4143.5	77	17x110
667	SO383	4126.5	217	17x110
668	SO384	4109.5	357	17x110
669	SO385	4092.5	77	17x110
670	SO386	4075.5	217	17x110
671	SO387	4058.5	357	17x110
672	SO388	4041.5	77	17x110
673	SO389	4024.5	217	17x110
674	SO390	4007.5	357	17x110
675	SO391	3990.5	77	17x110
676	SO392	3973.5	217	17x110
677	SO393	3956.5	357	17x110
678	SO394	3939.5	77	17x110
679	SO395	3922.5	217	17x110
680	SO396	3905.5	357	17x110
681	SO397	3888.5	77	17x110
682	SO398	3871.5	217	17x110
683	SO399	3854.5	357	17x110
684	SO400	3837.5	77	17x110
685	SO401	3820.5	217	17x110
686	SO402	3803.5	357	17x110
687	SO403	3786.5	77	17x110
688	SO404	3769.5	217	17x110
689	SO405	3752.5	357	17x110
690	SO406	3735.5	77	17x110
691	SO407	3718.5	217	17x110
692	SO408	3701.5	357	17x110
693	SO409	3684.5	77	17x110
694	SO410	3667.5	217	17x110
695	SO411	3650.5	357	17x110
696	SO412	3633.5	77	17x110
697	SO413	3616.5	217	17x110
698	SO414	3599.5	357	17x110
699	SO415	3582.5	77	17x110
700	SO416	3565.5	217	17x110

Himax Confidential
Do Not Copy

No.	Name	X	Y	Bump size
701	SO417	3548.5	357	17x110
702	SO418	3531.5	77	17x110
703	SO419	3514.5	217	17x110
704	SO420	3497.5	357	17x110
705	SO421	3480.5	77	17x110
706	SO422	3463.5	217	17x110
707	SO423	3446.5	357	17x110
708	SO424	3429.5	77	17x110
709	SO425	3412.5	217	17x110
710	SO426	3395.5	357	17x110
711	SO427	3378.5	77	17x110
712	SO428	3361.5	217	17x110
713	SO429	3344.5	357	17x110
714	SO430	3327.5	77	17x110
715	SO431	3310.5	217	17x110
716	SO432	3293.5	357	17x110
717	SO433	3276.5	77	17x110
718	SO434	3259.5	217	17x110
719	SO435	3242.5	357	17x110
720	SO436	3225.5	77	17x110
721	SO437	3208.5	217	17x110
722	SO438	3191.5	357	17x110
723	SO439	3174.5	77	17x110
724	SO440	3157.5	217	17x110
725	SO441	3140.5	357	17x110
726	SO442	3123.5	77	17x110
727	SO443	3106.5	217	17x110
728	SO444	3089.5	357	17x110
729	SO445	3072.5	77	17x110
730	SO446	3055.5	217	17x110
731	SO447	3038.5	357	17x110
732	SO448	3021.5	77	17x110
733	SO449	3004.5	217	17x110
734	SO450	2987.5	357	17x110
735	SO451	2970.5	77	17x110
736	SO452	2953.5	217	17x110
737	SO453	2936.5	357	17x110
738	SO454	2919.5	77	17x110
739	SO455	2902.5	217	17x110
740	SO456	2885.5	357	17x110
741	SO457	2868.5	77	17x110
742	SO458	2851.5	217	17x110
743	SO459	2834.5	357	17x110
744	SO460	2817.5	77	17x110
745	SO461	2800.5	217	17x110
746	SO462	2783.5	357	17x110
747	SO463	2766.5	77	17x110
748	SO464	2749.5	217	17x110
749	SO465	2732.5	357	17x110
750	SO466	2715.5	77	17x110

No.	Name	X	Y	Bump size
751	SO467	2698.5	217	17x110
752	SO468	2681.5	357	17x110
753	SO469	2664.5	77	17x110
754	SO470	2647.5	217	17x110
755	SO471	2630.5	357	17x110
756	SO472	2613.5	77	17x110
757	SO473	2596.5	217	17x110
758	SO474	2579.5	357	17x110
759	SO475	2562.5	77	17x110
760	SO476	2545.5	217	17x110
761	SO477	2528.5	357	17x110
762	SO478	2511.5	77	17x110
763	SO479	2494.5	217	17x110
764	SO480	2477.5	357	17x110
765	SO481	2460.5	77	17x110
766	SO482	2443.5	217	17x110
767	SO483	2426.5	357	17x110
768	SO484	2409.5	77	17x110
769	SO485	2392.5	217	17x110
770	SO486	2375.5	357	17x110
771	SO487	2358.5	77	17x110
772	SO488	2341.5	217	17x110
773	SO489	2324.5	357	17x110
774	SO490	2307.5	77	17x110
775	SO491	2290.5	217	17x110
776	SO492	2273.5	357	17x110
777	SO493	2256.5	77	17x110
778	SO494	2239.5	217	17x110
779	SO495	2222.5	357	17x110
780	SO496	2205.5	77	17x110
781	SO497	2188.5	217	17x110
782	SO498	2171.5	357	17x110
783	SO499	2154.5	77	17x110
784	SO500	2137.5	217	17x110
785	SO501	2120.5	357	17x110
786	SO502	2103.5	77	17x110
787	SO503	2086.5	217	17x110
788	SO504	2069.5	357	17x110
789	SO505	2052.5	77	17x110
790	SO506	2035.5	217	17x110
791	SO507	2018.5	357	17x110
792	SO508	2001.5	77	17x110
793	SO509	1984.5	217	17x110
794	SO510	1967.5	357	17x110
795	SO511	1950.5	77	17x110
796	SO512	1933.5	217	17x110
797	SO513	1916.5	357	17x110
798	SO514	1899.5	77	17x110
799	SO515	1882.5	217	17x110
800	SO516	1865.5	357	17x110

Himax Confidential
Do Not Copy

This information contained herein is the exclusive property of Himax and shall not be distributed, reproduced, or disclosed in whole or in part without prior written permission of Himax.

No.	Name	X	Y	Bump size
801	SO517	1848.5	77	17x110
802	SO518	1831.5	217	17x110
803	SO519	1814.5	357	17x110
804	SO520	1797.5	77	17x110
805	SO521	1780.5	217	17x110
806	SO522	1763.5	357	17x110
807	SO523	1746.5	77	17x110
808	SO524	1729.5	217	17x110
809	SO525	1712.5	357	17x110
810	SO526	1695.5	77	17x110
811	SO527	1678.5	217	17x110
812	SO528	1661.5	357	17x110
813	SO529	1644.5	77	17x110
814	SO530	1627.5	217	17x110
815	SO531	1610.5	357	17x110
816	SO532	1593.5	77	17x110
817	SO533	1576.5	217	17x110
818	SO534	1559.5	357	17x110
819	SO535	1542.5	77	17x110
820	SO536	1525.5	217	17x110
821	SO537	1508.5	357	17x110
822	SO538	1491.5	77	17x110
823	SO539	1474.5	217	17x110
824	SO540	1457.5	357	17x110
825	SO541	1440.5	77	17x110
826	SO542	1423.5	217	17x110
827	SO543	1406.5	357	17x110
828	SO544	1389.5	77	17x110
829	SO545	1372.5	217	17x110
830	SO546	1355.5	357	17x110
831	SO547	1338.5	77	17x110
832	SO548	1321.5	217	17x110
833	SO549	1304.5	357	17x110
834	SO550	1287.5	77	17x110
835	SO551	1270.5	217	17x110
836	SO552	1253.5	357	17x110
837	SO553	1236.5	77	17x110
838	SO554	1219.5	217	17x110
839	SO555	1202.5	357	17x110
840	SO556	1185.5	77	17x110
841	SO557	1168.5	217	17x110
842	SO558	1151.5	357	17x110
843	SO559	1134.5	77	17x110
844	SO560	1117.5	217	17x110
845	SO561	1100.5	357	17x110
846	SO562	1083.5	77	17x110
847	SO563	1066.5	217	17x110
848	SO564	1049.5	357	17x110
849	SO565	1032.5	77	17x110
850	SO566	1015.5	217	17x110

No.	Name	X	Y	Bump size
851	SO567	998.5	357	17x110
852	SO568	981.5	77	17x110
853	SO569	964.5	217	17x110
854	SO570	947.5	357	17x110
855	SO571	930.5	77	17x110
856	SO572	913.5	217	17x110
857	SO573	896.5	357	17x110
858	SO574	879.5	77	17x110
859	SO575	862.5	217	17x110
860	SO576	845.5	357	17x110
861	SO577	828.5	77	17x110
862	SO578	811.5	217	17x110
863	SO579	794.5	357	17x110
864	SO580	777.5	77	17x110
865	SO581	760.5	217	17x110
866	SO582	743.5	357	17x110
867	SO583	726.5	77	17x110
868	SO584	709.5	217	17x110
869	SO585	692.5	357	17x110
870	SO586	675.5	77	17x110
871	SO587	658.5	217	17x110
872	SO588	641.5	357	17x110
873	SO589	624.5	77	17x110
874	SO590	607.5	217	17x110
875	SO591	590.5	357	17x110
876	SO592	573.5	77	17x110
877	SO593	556.5	217	17x110
878	SO594	539.5	357	17x110
879	SO595	522.5	77	17x110
880	SO596	505.5	217	17x110
881	SO597	488.5	357	17x110
882	SO598	471.5	77	17x110
883	SO599	454.5	217	17x110
884	SO600	437.5	357	17x110
885	SHIELDING	403.5	357	17x110
886	SHIELDING	369.5	357	17x110
887	SHIELDING	335.5	357	17x110
888	SHIELDING	301.5	357	17x110
889	SHIELDING	267.5	357	17x110
890	SHIELDING	233.5	357	17x110
891	SHIELDING	-233.5	357	17x110
892	SHIELDING	-267.5	357	17x110
893	SHIELDING	-301.5	357	17x110
894	SHIELDING	-335.5	357	17x110
895	SHIELDING	-369.5	357	17x110
896	SHIELDING	-403.5	357	17x110
897	SO601	-437.5	357	17x110
898	SO602	-454.5	217	17x110
899	SO603	-471.5	77	17x110
900	SO604	-488.5	357	17x110

Himax Confidential
Do Not Copy

This information contained herein is the exclusive property of Himax and shall not be distributed, reproduced, or disclosed in whole or in part without prior written permission of Himax.

No.	Name	X	Y	Bump size
901	SO605	-505.5	217	17x110
902	SO606	-522.5	77	17x110
903	SO607	-539.5	357	17x110
904	SO608	-556.5	217	17x110
905	SO609	-573.5	77	17x110
906	SO610	-590.5	357	17x110
907	SO611	-607.5	217	17x110
908	SO612	-624.5	77	17x110
909	SO613	-641.5	357	17x110
910	SO614	-658.5	217	17x110
911	SO615	-675.5	77	17x110
912	SO616	-692.5	357	17x110
913	SO617	-709.5	217	17x110
914	SO618	-726.5	77	17x110
915	SO619	-743.5	357	17x110
916	SO620	-760.5	217	17x110
917	SO621	-777.5	77	17x110
918	SO622	-794.5	357	17x110
919	SO623	-811.5	217	17x110
920	SO624	-828.5	77	17x110
921	SO625	-845.5	357	17x110
922	SO626	-862.5	217	17x110
923	SO627	-879.5	77	17x110
924	SO628	-896.5	357	17x110
925	SO629	-913.5	217	17x110
926	SO630	-930.5	77	17x110
927	SO631	-947.5	357	17x110
928	SO632	-964.5	217	17x110
929	SO633	-981.5	77	17x110
930	SO634	-998.5	357	17x110
931	SO635	-1015.5	217	17x110
932	SO636	-1032.5	77	17x110
933	SO637	-1049.5	357	17x110
934	SO638	-1066.5	217	17x110
935	SO639	-1083.5	77	17x110
936	SO640	-1100.5	357	17x110
937	SO641	-1117.5	217	17x110
938	SO642	-1134.5	77	17x110
939	SO643	-1151.5	357	17x110
940	SO644	-1168.5	217	17x110
941	SO645	-1185.5	77	17x110
942	SO646	-1202.5	357	17x110
943	SO647	-1219.5	217	17x110
944	SO648	-1236.5	77	17x110
945	SO649	-1253.5	357	17x110
946	SO650	-1270.5	217	17x110
947	SO651	-1287.5	77	17x110
948	SO652	-1304.5	357	17x110
949	SO653	-1321.5	217	17x110
950	SO654	-1338.5	77	17x110

No.	Name	X	Y	Bump size
951	SO655	-1355.5	357	17x110
952	SO656	-1372.5	217	17x110
953	SO657	-1389.5	77	17x110
954	SO658	-1406.5	357	17x110
955	SO659	-1423.5	217	17x110
956	SO660	-1440.5	77	17x110
957	SO661	-1457.5	357	17x110
958	SO662	-1474.5	217	17x110
959	SO663	-1491.5	77	17x110
960	SO664	-1508.5	357	17x110
961	SO665	-1525.5	217	17x110
962	SO666	-1542.5	77	17x110
963	SO667	-1559.5	357	17x110
964	SO668	-1576.5	217	17x110
965	SO669	-1593.5	77	17x110
966	SO670	-1610.5	357	17x110
967	SO671	-1627.5	217	17x110
968	SO672	-1644.5	77	17x110
969	SO673	-1661.5	357	17x110
970	SO674	-1678.5	217	17x110
971	SO675	-1695.5	77	17x110
972	SO676	-1712.5	357	17x110
973	SO677	-1729.5	217	17x110
974	SO678	-1746.5	77	17x110
975	SO679	-1763.5	357	17x110
976	SO680	-1780.5	217	17x110
977	SO681	-1797.5	77	17x110
978	SO682	-1814.5	357	17x110
979	SO683	-1831.5	217	17x110
980	SO684	-1848.5	77	17x110
981	SO685	-1865.5	357	17x110
982	SO686	-1882.5	217	17x110
983	SO687	-1899.5	77	17x110
984	SO688	-1916.5	357	17x110
985	SO689	-1933.5	217	17x110
986	SO690	-1950.5	77	17x110
987	SO691	-1967.5	357	17x110
988	SO692	-1984.5	217	17x110
989	SO693	-2001.5	77	17x110
990	SO694	-2018.5	357	17x110
991	SO695	-2035.5	217	17x110
992	SO696	-2052.5	77	17x110
993	SO697	-2069.5	357	17x110
994	SO698	-2086.5	217	17x110
995	SO699	-2103.5	77	17x110
996	SO700	-2120.5	357	17x110
997	SO701	-2137.5	217	17x110
998	SO702	-2154.5	77	17x110
999	SO703	-2171.5	357	17x110
1000	SO704	-2188.5	217	17x110

Himax Confidential
Do Not Copy

This information contained herein is the exclusive property of Himax and shall not be distributed, reproduced, or disclosed in whole or in part without prior written permission of Himax.

No.	Name	X	Y	Bump size
1001	SO705	-2205.5	77	17x110
1002	SO706	-2222.5	357	17x110
1003	SO707	-2239.5	217	17x110
1004	SO708	-2256.5	77	17x110
1005	SO709	-2273.5	357	17x110
1006	SO710	-2290.5	217	17x110
1007	SO711	-2307.5	77	17x110
1008	SO712	-2324.5	357	17x110
1009	SO713	-2341.5	217	17x110
1010	SO714	-2358.5	77	17x110
1011	SO715	-2375.5	357	17x110
1012	SO716	-2392.5	217	17x110
1013	SO717	-2409.5	77	17x110
1014	SO718	-2426.5	357	17x110
1015	SO719	-2443.5	217	17x110
1016	SO720	-2460.5	77	17x110
1017	SO721	-2477.5	357	17x110
1018	SO722	-2494.5	217	17x110
1019	SO723	-2511.5	77	17x110
1020	SO724	-2528.5	357	17x110
1021	SO725	-2545.5	217	17x110
1022	SO726	-2562.5	77	17x110
1023	SO727	-2579.5	357	17x110
1024	SO728	-2596.5	217	17x110
1025	SO729	-2613.5	77	17x110
1026	SO730	-2630.5	357	17x110
1027	SO731	-2647.5	217	17x110
1028	SO732	-2664.5	77	17x110
1029	SO733	-2681.5	357	17x110
1030	SO734	-2698.5	217	17x110
1031	SO735	-2715.5	77	17x110
1032	SO736	-2732.5	357	17x110
1033	SO737	-2749.5	217	17x110
1034	SO738	-2766.5	77	17x110
1035	SO739	-2783.5	357	17x110
1036	SO740	-2800.5	217	17x110
1037	SO741	-2817.5	77	17x110
1038	SO742	-2834.5	357	17x110
1039	SO743	-2851.5	217	17x110
1040	SO744	-2868.5	77	17x110
1041	SO745	-2885.5	357	17x110
1042	SO746	-2902.5	217	17x110
1043	SO747	-2919.5	77	17x110
1044	SO748	-2936.5	357	17x110
1045	SO749	-2953.5	217	17x110
1046	SO750	-2970.5	77	17x110
1047	SO751	-2987.5	357	17x110
1048	SO752	-3004.5	217	17x110
1049	SO753	-3021.5	77	17x110
1050	SO754	-3038.5	357	17x110

No.	Name	X	Y	Bump size
1051	SO755	-3055.5	217	17x110
1052	SO756	-3072.5	77	17x110
1053	SO757	-3089.5	357	17x110
1054	SO758	-3106.5	217	17x110
1055	SO759	-3123.5	77	17x110
1056	SO760	-3140.5	357	17x110
1057	SO761	-3157.5	217	17x110
1058	SO762	-3174.5	77	17x110
1059	SO763	-3191.5	357	17x110
1060	SO764	-3208.5	217	17x110
1061	SO765	-3225.5	77	17x110
1062	SO766	-3242.5	357	17x110
1063	SO767	-3259.5	217	17x110
1064	SO768	-3276.5	77	17x110
1065	SO769	-3293.5	357	17x110
1066	SO770	-3310.5	217	17x110
1067	SO771	-3327.5	77	17x110
1068	SO772	-3344.5	357	17x110
1069	SO773	-3361.5	217	17x110
1070	SO774	-3378.5	77	17x110
1071	SO775	-3395.5	357	17x110
1072	SO776	-3412.5	217	17x110
1073	SO777	-3429.5	77	17x110
1074	SO778	-3446.5	357	17x110
1075	SO779	-3463.5	217	17x110
1076	SO780	-3480.5	77	17x110
1077	SO781	-3497.5	357	17x110
1078	SO782	-3514.5	217	17x110
1079	SO783	-3531.5	77	17x110
1080	SO784	-3548.5	357	17x110
1081	SO785	-3565.5	217	17x110
1082	SO786	-3582.5	77	17x110
1083	SO787	-3599.5	357	17x110
1084	SO788	-3616.5	217	17x110
1085	SO789	-3633.5	77	17x110
1086	SO790	-3650.5	357	17x110
1087	SO791	-3667.5	217	17x110
1088	SO792	-3684.5	77	17x110
1089	SO793	-3701.5	357	17x110
1090	SO794	-3718.5	217	17x110
1091	SO795	-3735.5	77	17x110
1092	SO796	-3752.5	357	17x110
1093	SO797	-3769.5	217	17x110
1094	SO798	-3786.5	77	17x110
1095	SO799	-3803.5	357	17x110
1096	SO800	-3820.5	217	17x110
1097	SO801	-3837.5	77	17x110
1098	SO802	-3854.5	357	17x110
1099	SO803	-3871.5	217	17x110
1100	SO804	-3888.5	77	17x110

Himax Confidential
Do NOT COPY

No.	Name	X	Y	Bump size
1101	SO805	-3905.5	357	17x110
1102	SO806	-3922.5	217	17x110
1103	SO807	-3939.5	77	17x110
1104	SO808	-3956.5	357	17x110
1105	SO809	-3973.5	217	17x110
1106	SO810	-3990.5	77	17x110
1107	SO811	-4007.5	357	17x110
1108	SO812	-4024.5	217	17x110
1109	SO813	-4041.5	77	17x110
1110	SO814	-4058.5	357	17x110
1111	SO815	-4075.5	217	17x110
1112	SO816	-4092.5	77	17x110
1113	SO817	-4109.5	357	17x110
1114	SO818	-4126.5	217	17x110
1115	SO819	-4143.5	77	17x110
1116	SO820	-4160.5	357	17x110
1117	SO821	-4177.5	217	17x110
1118	SO822	-4194.5	77	17x110
1119	SO823	-4211.5	357	17x110
1120	SO824	-4228.5	217	17x110
1121	SO825	-4245.5	77	17x110
1122	SO826	-4262.5	357	17x110
1123	SO827	-4279.5	217	17x110
1124	SO828	-4296.5	77	17x110
1125	SO829	-4313.5	357	17x110
1126	SO830	-4330.5	217	17x110
1127	SO831	-4347.5	77	17x110
1128	SO832	-4364.5	357	17x110
1129	SO833	-4381.5	217	17x110
1130	SO834	-4398.5	77	17x110
1131	SO835	-4415.5	357	17x110
1132	SO836	-4432.5	217	17x110
1133	SO837	-4449.5	77	17x110
1134	SO838	-4466.5	357	17x110
1135	SO839	-4483.5	217	17x110
1136	SO840	-4500.5	77	17x110
1137	SO841	-4517.5	357	17x110
1138	SO842	-4534.5	217	17x110
1139	SO843	-4551.5	77	17x110
1140	SO844	-4568.5	357	17x110
1141	SO845	-4585.5	217	17x110
1142	SO846	-4602.5	77	17x110
1143	SO847	-4619.5	357	17x110
1144	SO848	-4636.5	217	17x110
1145	SO849	-4653.5	77	17x110
1146	SO850	-4670.5	357	17x110
1147	SO851	-4687.5	217	17x110
1148	SO852	-4704.5	77	17x110
1149	SO853	-4721.5	357	17x110
1150	SO854	-4738.5	217	17x110

No.	Name	X	Y	Bump size
1151	SO855	-4755.5	77	17x110
1152	SO856	-4772.5	357	17x110
1153	SO857	-4789.5	217	17x110
1154	SO858	-4806.5	77	17x110
1155	SO859	-4823.5	357	17x110
1156	SO860	-4840.5	217	17x110
1157	SO861	-4857.5	77	17x110
1158	SO862	-4874.5	357	17x110
1159	SO863	-4891.5	217	17x110
1160	SO864	-4908.5	77	17x110
1161	SO865	-4925.5	357	17x110
1162	SO866	-4942.5	217	17x110
1163	SO867	-4959.5	77	17x110
1164	SO868	-4976.5	357	17x110
1165	SO869	-4993.5	217	17x110
1166	SO870	-5010.5	77	17x110
1167	SO871	-5027.5	357	17x110
1168	SO872	-5044.5	217	17x110
1169	SO873	-5061.5	77	17x110
1170	SO874	-5078.5	357	17x110
1171	SO875	-5095.5	217	17x110
1172	SO876	-5112.5	77	17x110
1173	SO877	-5129.5	357	17x110
1174	SO878	-5146.5	217	17x110
1175	SO879	-5163.5	77	17x110
1176	SO880	-5180.5	357	17x110
1177	SO881	-5197.5	217	17x110
1178	SO882	-5214.5	77	17x110
1179	SO883	-5231.5	357	17x110
1180	SO884	-5248.5	217	17x110
1181	SO885	-5265.5	77	17x110
1182	SO886	-5282.5	357	17x110
1183	SO887	-5299.5	217	17x110
1184	SO888	-5316.5	77	17x110
1185	SO889	-5333.5	357	17x110
1186	SO890	-5350.5	217	17x110
1187	SO891	-5367.5	77	17x110
1188	SO892	-5384.5	357	17x110
1189	SO893	-5401.5	217	17x110
1190	SO894	-5418.5	77	17x110
1191	SO895	-5435.5	357	17x110
1192	SO896	-5452.5	217	17x110
1193	SO897	-5469.5	77	17x110
1194	SO898	-5486.5	357	17x110
1195	SO899	-5503.5	217	17x110
1196	SO900	-5520.5	77	17x110
1197	SO901	-5537.5	357	17x110
1198	SO902	-5554.5	217	17x110
1199	SO903	-5571.5	77	17x110
1200	SO904	-5588.5	357	17x110

Himax Confidential
Do Not Copy

This information contained herein is the exclusive property of Himax and shall not be distributed, reproduced, or disclosed in whole or in part without prior written permission of Himax.

No.	Name	X	Y	Bump size
1201	SO905	-5605.5	217	17x110
1202	SO906	-5622.5	77	17x110
1203	SO907	-5639.5	357	17x110
1204	SO908	-5656.5	217	17x110
1205	SO909	-5673.5	77	17x110
1206	SO910	-5690.5	357	17x110
1207	SO911	-5707.5	217	17x110
1208	SO912	-5724.5	77	17x110
1209	SO913	-5741.5	357	17x110
1210	SO914	-5758.5	217	17x110
1211	SO915	-5775.5	77	17x110
1212	SO916	-5792.5	357	17x110
1213	SO917	-5809.5	217	17x110
1214	SO918	-5826.5	77	17x110
1215	SO919	-5843.5	357	17x110
1216	SO920	-5860.5	217	17x110
1217	SO921	-5877.5	77	17x110
1218	SO922	-5894.5	357	17x110
1219	SO923	-5911.5	217	17x110
1220	SO924	-5928.5	77	17x110
1221	SO925	-5945.5	357	17x110
1222	SO926	-5962.5	217	17x110
1223	SO927	-5979.5	77	17x110
1224	SO928	-5996.5	357	17x110
1225	SO929	-6013.5	217	17x110
1226	SO930	-6030.5	77	17x110
1227	SO931	-6047.5	357	17x110
1228	SO932	-6064.5	217	17x110
1229	SO933	-6081.5	77	17x110
1230	SO934	-6098.5	357	17x110
1231	SO935	-6115.5	217	17x110
1232	SO936	-6132.5	77	17x110
1233	SO937	-6149.5	357	17x110
1234	SO938	-6166.5	217	17x110
1235	SO939	-6183.5	77	17x110
1236	SO940	-6200.5	357	17x110
1237	SO941	-6217.5	217	17x110
1238	SO942	-6234.5	77	17x110
1239	SO943	-6251.5	357	17x110
1240	SO944	-6268.5	217	17x110
1241	SO945	-6285.5	77	17x110
1242	SO946	-6302.5	357	17x110
1243	SO947	-6319.5	217	17x110
1244	SO948	-6336.5	77	17x110
1245	SO949	-6353.5	357	17x110
1246	SO950	-6370.5	217	17x110
1247	SO951	-6387.5	77	17x110
1248	SO952	-6404.5	357	17x110
1249	SO953	-6421.5	217	17x110
1250	SO954	-6438.5	77	17x110

No.	Name	X	Y	Bump size
1251	SO955	-6455.5	357	17x110
1252	SO956	-6472.5	217	17x110
1253	SO957	-6489.5	77	17x110
1254	SO958	-6506.5	357	17x110
1255	SO959	-6523.5	217	17x110
1256	SO960	-6540.5	77	17x110
1257	SO961	-6557.5	357	17x110
1258	SO962	-6574.5	217	17x110
1259	SO963	-6591.5	77	17x110
1260	SO964	-6608.5	357	17x110
1261	SO965	-6625.5	217	17x110
1262	SO966	-6642.5	77	17x110
1263	SO967	-6659.5	357	17x110
1264	SO968	-6676.5	217	17x110
1265	SO969	-6693.5	77	17x110
1266	SO970	-6710.5	357	17x110
1267	SO971	-6727.5	217	17x110
1268	SO972	-6744.5	77	17x110
1269	SO973	-6761.5	357	17x110
1270	SO974	-6778.5	217	17x110
1271	SO975	-6795.5	77	17x110
1272	SO976	-6812.5	357	17x110
1273	SO977	-6829.5	217	17x110
1274	SO978	-6846.5	77	17x110
1275	SO979	-6863.5	357	17x110
1276	SO980	-6880.5	217	17x110
1277	SO981	-6897.5	77	17x110
1278	SO982	-6914.5	357	17x110
1279	SO983	-6931.5	217	17x110
1280	SO984	-6948.5	77	17x110
1281	SO985	-6965.5	357	17x110
1282	SO986	-6982.5	217	17x110
1283	SO987	-6999.5	77	17x110
1284	SO988	-7016.5	357	17x110
1285	SO989	-7033.5	217	17x110
1286	SO990	-7050.5	77	17x110
1287	SO991	-7067.5	357	17x110
1288	SO992	-7084.5	217	17x110
1289	SO993	-7101.5	77	17x110
1290	SO994	-7118.5	357	17x110
1291	SO995	-7135.5	217	17x110
1292	SO996	-7152.5	77	17x110
1293	SO997	-7169.5	357	17x110
1294	SO998	-7186.5	217	17x110
1295	SO999	-7203.5	77	17x110
1296	SO1000	-7220.5	357	17x110
1297	SO1001	-7237.5	217	17x110
1298	SO1002	-7254.5	77	17x110
1299	SO1003	-7271.5	357	17x110
1300	SO1004	-7288.5	217	17x110

Himax Confidential
Do Not Copy

This information contained herein is the exclusive property of Himax and shall not be distributed, reproduced, or disclosed in whole or in part without prior written permission of Himax.

No.	Name	X	Y	Bump size
1301	SO1005	-7305.5	77	17x110
1302	SO1006	-7322.5	357	17x110
1303	SO1007	-7339.5	217	17x110
1304	SO1008	-7356.5	77	17x110
1305	SO1009	-7373.5	357	17x110
1306	SO1010	-7390.5	217	17x110
1307	SO1011	-7407.5	77	17x110
1308	SO1012	-7424.5	357	17x110
1309	SO1013	-7441.5	217	17x110
1310	SO1014	-7458.5	77	17x110
1311	SO1015	-7475.5	357	17x110
1312	SO1016	-7492.5	217	17x110
1313	SO1017	-7509.5	77	17x110
1314	SO1018	-7526.5	357	17x110
1315	SO1019	-7543.5	217	17x110
1316	SO1020	-7560.5	77	17x110
1317	SO1021	-7577.5	357	17x110
1318	SO1022	-7594.5	217	17x110
1319	SO1023	-7611.5	77	17x110
1320	SO1024	-7628.5	357	17x110
1321	SO1025	-7645.5	217	17x110
1322	SO1026	-7662.5	77	17x110
1323	SO1027	-7679.5	357	17x110
1324	SO1028	-7696.5	217	17x110
1325	SO1029	-7713.5	77	17x110
1326	SO1030	-7730.5	357	17x110
1327	SO1031	-7747.5	217	17x110
1328	SO1032	-7764.5	77	17x110
1329	SO1033	-7781.5	357	17x110
1330	SO1034	-7798.5	217	17x110
1331	SO1035	-7815.5	77	17x110
1332	SO1036	-7832.5	357	17x110
1333	SO1037	-7849.5	217	17x110
1334	SO1038	-7866.5	77	17x110
1335	SO1039	-7883.5	357	17x110
1336	SO1040	-7900.5	217	17x110
1337	SO1041	-7917.5	77	17x110
1338	SO1042	-7934.5	357	17x110
1339	SO1043	-7951.5	217	17x110
1340	SO1044	-7968.5	77	17x110
1341	SO1045	-7985.5	357	17x110
1342	SO1046	-8002.5	217	17x110
1343	SO1047	-8019.5	77	17x110
1344	SO1048	-8036.5	357	17x110
1345	SO1049	-8053.5	217	17x110
1346	SO1050	-8070.5	77	17x110
1347	SO1051	-8087.5	357	17x110
1348	SO1052	-8104.5	217	17x110
1349	SO1053	-8121.5	77	17x110
1350	SO1054	-8138.5	357	17x110

No.	Name	X	Y	Bump size
1351	SO1055	-8155.5	217	17x110
1352	SO1056	-8172.5	77	17x110
1353	SO1057	-8189.5	357	17x110
1354	SO1058	-8206.5	217	17x110
1355	SO1059	-8223.5	77	17x110
1356	SO1060	-8240.5	357	17x110
1357	SO1061	-8257.5	217	17x110
1358	SO1062	-8274.5	77	17x110
1359	SO1063	-8291.5	357	17x110
1360	SO1064	-8308.5	217	17x110
1361	SO1065	-8325.5	77	17x110
1362	SO1066	-8342.5	357	17x110
1363	SO1067	-8359.5	217	17x110
1364	SO1068	-8376.5	77	17x110
1365	SO1069	-8393.5	357	17x110
1366	SO1070	-8410.5	217	17x110
1367	SO1071	-8427.5	77	17x110
1368	SO1072	-8444.5	357	17x110
1369	SO1073	-8461.5	217	17x110
1370	SO1074	-8478.5	77	17x110
1371	SO1075	-8495.5	357	17x110
1372	SO1076	-8512.5	217	17x110
1373	SO1077	-8529.5	77	17x110
1374	SO1078	-8546.5	357	17x110
1375	SO1079	-8563.5	217	17x110
1376	SO1080	-8580.5	77	17x110
1377	SO1081	-8597.5	357	17x110
1378	SO1082	-8614.5	217	17x110
1379	SO1083	-8631.5	77	17x110
1380	SO1084	-8648.5	357	17x110
1381	SO1085	-8665.5	217	17x110
1382	SO1086	-8682.5	77	17x110
1383	SO1087	-8699.5	357	17x110
1384	SO1088	-8716.5	217	17x110
1385	SO1089	-8733.5	77	17x110
1386	SO1090	-8750.5	357	17x110
1387	SO1091	-8767.5	217	17x110
1388	SO1092	-8784.5	77	17x110
1389	SO1093	-8801.5	357	17x110
1390	SO1094	-8818.5	217	17x110
1391	SO1095	-8835.5	77	17x110
1392	SO1096	-8852.5	357	17x110
1393	SO1097	-8869.5	217	17x110
1394	SO1098	-8886.5	77	17x110
1395	SO1099	-8903.5	357	17x110
1396	SO1100	-8920.5	217	17x110
1397	SO1101	-8937.5	77	17x110
1398	SO1102	-8954.5	357	17x110
1399	SO1103	-8971.5	217	17x110
1400	SO1104	-8988.5	77	17x110

Himax Confidential
Do Not Copy

This information contained herein is the exclusive property of Himax and shall not be distributed, reproduced, or disclosed in whole or in part without prior written permission of Himax.

No.	Name	X	Y	Bump size
1401	SO1105	-9005.5	357	17x110
1402	SO1106	-9022.5	217	17x110
1403	SO1107	-9039.5	77	17x110
1404	SO1108	-9056.5	357	17x110
1405	SO1109	-9073.5	217	17x110
1406	SO1110	-9090.5	77	17x110
1407	SO1111	-9107.5	357	17x110
1408	SO1112	-9124.5	217	17x110
1409	SO1113	-9141.5	77	17x110
1410	SO1114	-9158.5	357	17x110
1411	SO1115	-9175.5	217	17x110
1412	SO1116	-9192.5	77	17x110
1413	SO1117	-9209.5	357	17x110
1414	SO1118	-9226.5	217	17x110
1415	SO1119	-9243.5	77	17x110
1416	SO1120	-9260.5	357	17x110
1417	SO1121	-9277.5	217	17x110
1418	SO1122	-9294.5	77	17x110
1419	SO1123	-9311.5	357	17x110
1420	SO1124	-9328.5	217	17x110
1421	SO1125	-9345.5	77	17x110
1422	SO1126	-9362.5	357	17x110
1423	SO1127	-9379.5	217	17x110
1424	SO1128	-9396.5	77	17x110
1425	SO1129	-9413.5	357	17x110
1426	SO1130	-9430.5	217	17x110
1427	SO1131	-9447.5	77	17x110
1428	SO1132	-9464.5	357	17x110
1429	SO1133	-9481.5	217	17x110
1430	SO1134	-9498.5	77	17x110
1431	SO1135	-9515.5	357	17x110
1432	SO1136	-9532.5	217	17x110
1433	SO1137	-9549.5	77	17x110
1434	SO1138	-9566.5	357	17x110
1435	SO1139	-9583.5	217	17x110
1436	SO1140	-9600.5	77	17x110
1437	SO1141	-9617.5	357	17x110
1438	SO1142	-9634.5	217	17x110
1439	SO1143	-9651.5	77	17x110
1440	SO1144	-9668.5	357	17x110
1441	SO1145	-9685.5	217	17x110
1442	SO1146	-9702.5	77	17x110
1443	SO1147	-9719.5	357	17x110
1444	SO1148	-9736.5	217	17x110
1445	SO1149	-9753.5	77	17x110
1446	SO1150	-9770.5	357	17x110
1447	SO1151	-9787.5	217	17x110
1448	SO1152	-9804.5	77	17x110
1449	SO1153	-9821.5	357	17x110
1450	SO1154	-9838.5	217	17x110

No.	Name	X	Y	Bump size
1451	SO1155	-9855.5	77	17x110
1452	SO1156	-9872.5	357	17x110
1453	SO1157	-9889.5	217	17x110
1454	SO1158	-9906.5	77	17x110
1455	SO1159	-9923.5	357	17x110
1456	SO1160	-9940.5	217	17x110
1457	SO1161	-9957.5	77	17x110
1458	SO1162	-9974.5	357	17x110
1459	SO1163	-9991.5	217	17x110
1460	SO1164	-10008.5	77	17x110
1461	SO1165	-10025.5	357	17x110
1462	SO1166	-10042.5	217	17x110
1463	SO1167	-10059.5	77	17x110
1464	SO1168	-10076.5	357	17x110
1465	SO1169	-10093.5	217	17x110
1466	SO1170	-10110.5	77	17x110
1467	SO1171	-10127.5	357	17x110
1468	SO1172	-10144.5	217	17x110
1469	SO1173	-10161.5	77	17x110
1470	SO1174	-10178.5	357	17x110
1471	SO1175	-10195.5	217	17x110
1472	SO1176	-10212.5	77	17x110
1473	SO1177	-10229.5	357	17x110
1474	SO1178	-10246.5	217	17x110
1475	SO1179	-10263.5	77	17x110
1476	SO1180	-10280.5	357	17x110
1477	SO1181	-10297.5	217	17x110
1478	SO1182	-10314.5	77	17x110
1479	SO1183	-10331.5	357	17x110
1480	SO1184	-10348.5	217	17x110
1481	SO1185	-10365.5	77	17x110
1482	SO1186	-10382.5	357	17x110
1483	SO1187	-10399.5	217	17x110
1484	SO1188	-10416.5	77	17x110
1485	SO1189	-10433.5	357	17x110
1486	SO1190	-10450.5	217	17x110
1487	SO1191	-10467.5	77	17x110
1488	SO1192	-10484.5	357	17x110
1489	SO1193	-10501.5	217	17x110
1490	SO1194	-10518.5	77	17x110
1491	SO1195	-10535.5	357	17x110
1492	SO1196	-10552.5	217	17x110
1493	SO1197	-10569.5	77	17x110
1494	SO1198	-10586.5	357	17x110
1495	SO1199	-10603.5	217	17x110
1496	SO1200	-10620.5	77	17x110
1497	SHIELDING	-10664	377	30x70
1498	COM1_T	-10714	377	30x70
1499	COM1_T	-10764	377	30x70
1500	SYNCR	-10814	377	30x70

Himax Confidential
Do Not Copy

This information contained herein is the exclusive property of Himax and shall not be distributed, reproduced, or disclosed in whole or in part without prior written permission of Himax.

No.	Name	X	Y	Bump size
1501	LDR	-10864	377	30x70
1502	POLR	-10914	377	30x70
1503	DATR0	-11179	397	100x30
1504	DATR1	-11049	357	100x30
1505	DATR2	-11179	317	100x30
1506	DATR3	-11049	277	100x30
1507	DATR4	-11179	237	100x30
1508	DATR5	-11049	197	100x30
1509	DATR6	-11179	157	100x30
1510	DATR7	-11049	117	100x30
1511	DATR8	-11179	77	100x30
1512	DATR9	-11049	37	100x30
1513	DATR10	-11179	-3	100x30
1514	DATR11	-11049	-43	100x30
1515	DATR12	-11179	-83	100x30
1516	DATR13	-11049	-123	100x30
1517	DATR14	-11179	-163	100x30
1518	DATR15	-11049	-203	100x30
1519	DATR16	-11179	-243	100x30
1520	DATR17	-11049	-283	100x30
1521	DIOR	-11179	-323	100x30
1522	DCLKR	-11049	-363	100x30

ALIGNMENT_MARK_R	10773	93
ALIGNMENT_MARK_L	-10773	93

Himax Confidential
Do Not Copy

This information contained herein is the exclusive property of Himax and shall not be distributed, reproduced, or disclosed in whole or in part without prior written permission of Himax.

15. Ordering Information

Part No.	Package Type
HX8264-D03XPDxxx	X: mean fab code PD : mean COG xxx : mean chip thickness (μm) (default 400μm)

16. Revision History

Version	Date	Description of changes
01	2010/05/13	New setup
02	2010/11/30	Page 64 Modify figure 13.1: Pin assignment
03	2012/01/09	Page 65 Modify Bump height: 12μm±3μm or 9μm±2μm

Himax Confidential
Do Not Copy

This information contained herein is the exclusive property of Himax and shall not be distributed, reproduced, or disclosed in whole or in part without prior written permission of Himax.